FINAL DEVELOPMENT PLAN
QUEENS RIDGE @ MILFORD

CITY OF MILFORD
CLERMONT COUNTY, OHIO

GENERAL CONSTRUCTION NOTES

OVERALL:
APPROPRIATE UTILITY COMPANIES SHALL BE NOTIFIED AT LEAST 48 HOURS PRIOR TO BREAKING GROUND FOR THE PURPOSE OF VERIFYING BY FIELD INSPECTION, THE EXACT LOCATION OF UNDERGROUND UTILITIES.

THE CONTRACTOR SHALL EXERCISE DUE CARE DURING CONSTRUCTION SO AS NOT TO DESTROY ANY TREES, PLANTS, SHRUBS OR STRUCTURES OUTSIDE OF THE INDICATED WORK LIMITS AND THOSE NOT SPECIFICALLY MARKED FOR REMOVAL OR RELOCATION WITHIN THE WORK LIMITS.

ALL MATERIALS AND CONSTRUCTION PROCEDURES SHALL BE IN ACCORDANCE WITH CITY OF MILFORD & "CONSTRUCTION AND MATERIAL SPECIFICATIONS OF THE STATE OF OHIO DEPARTMENT OF TRANSPORTATION".

UNLESS OTHERWISE NOTED ALL CONSTRUCTION DETAILS SHALL CONFORM WITH THE CITY OF MILFORD & "STANDARD CONSTRUCTION DRAWINGS OF THE STATE OF OHIO DEPARTMENT OF TRANSPORTATION".

THE ENGINEER/SURVEYOR DOES NOT ASSUME ANY LIABILITY FOR THE LOCATION OF UTILITIES, INCLUDING INDIVIDUAL SERVICE LINES & PRIVATE MAINS NOT SHOWN ON PUBLIC RECORDS. THE CONTRACTOR SHALL BE RESPONSIBLE FOR EXACTLY LOCATING AND PROTECTING ALL UTILITIES, BOTH ABOVE AND BELOW GROUND, THAT EXIST IN THE WORK AREA AND WHICH MAY COME IN CONFLICT WITH HIS OPERATIONS. ANY DAMAGE TO UTILITIES WHICH HAVE BEEN ACCURATELY LOCATED, WHICH IS CAUSED BY THE CONTRACTOR'S OPERATIONS, SHALL BE REPAIRED AT THE CONTRACTOR'S EXPENSE. ASSISTANCE IN LOCATING UNDERGROUND UTILITIES CAN BE OBTAINED BY CONTACTING THE UTILITY COMPANIES AT THE LOCATIONS LISTED ON THIS PAGE. IF A DISCREPANCY IS FOUND TO EXIST, THE CONTRACTOR SHALL NOTIFY THE ENGINEER IMMEDIATELY.

THE CONTRACTOR SHALL OBTAIN OR VERIFY THAT ALL PERMITS ARE OBTAINED.

THE CONTRACTOR SHALL VERIFY EXISTING SITE INFORMATION AND REQUIRED EARTHWORK.

ALL RECOMMENDATIONS IN THE GEOTECHNICAL REPORT SHALL BE FOLLOWED.

ALL PROPOSED SPOT ELEVATIONS ARE TO FINISHED GRADE.

UTILITY SPECIFICATION:
ALL STORM SEWER TO BE PRIVATE, MAINTAINED BY THE OWNER AND BE CORRUGATED POLYETHYLENE SMOOTH LINED PIPE, CONFORMING TO ODOT ITEM 707.33 OR PVC CORRUGATED SMOOTH INTERIOR PIPE, CONFORMING TO ODOT ITEM 707.42 AND INSTALLED PER ODOT ITEM 603.

STEPS SHALL BE REQUIRED IN ALL CATCH BASINS WHERE THE DEPTH EXCEEDS FOUR (4) FEET AND SHALL MEET THE REQUIREMENTS OF THE STATE OF OHIO STANDARD CONSTRUCTION DRAWING MH-1.

ALL CATCH BASINS, INLETS & MANHOLES IN PAVED AREAS SHALL BE SLOPED ACCORDINGLY WITH FINAL PAVEMENT SURFACE PER GRADING PLAN.

WATER MAIN TO BE DUCTILE IRON CLASS 53 (O.D.O.T. ITEM 748.01) OR PVC AWWA C900, (ODOT ITEM 748.02) UNLESS OTHERWISE NOTED. FIRE HYDRANTS TO BE "MUELLER" OR "KENNEDY" OR APPROVED EQUAL AS DIRECTED BY CITY OF MILFORD.

PROPERLY SIZED THRUST BLOCKS SHALL BE PROVIDED FOR WATER MAIN AT EVERY CHANGE IN DIRECTION SUCH THAT IS PROVIDES ADEQUATE RESISTANCE TO MAINTAIN THE INTEGRITY OF THE JOINTS. SEE DETAILS ON PLANS FOR BLOCKING DETAILS.

ALL SANITARY SEWER PIPE SHALL BE P.V.C., SDR 35, ASTM D-3034.

UTILITY TRENCH BACKFILL SHALL BE PER THE DETAILS SHOWN ON THE PLANS.

EROSION CONTROL:
ALL EROSION CONTROL MEASURES MUST BE IN PLACE PRIOR TO ANY STRIPPING OF VEGETATION OR EXCAVATION.

EROSION CONTROL WILL BE ACCOMPLISHED BY STRATEGICALLY PLACING ROCK CHECK DAMS, MULCH, BERMS AND/OR SILT FENCES IN SWALES AND RUNOFF AREAS, SUCH ITEMS TO BE REPLACED AND EXPANDED AS NECESSARY TO AFFORD NECESSARY CONTROL.

SILT FENCES USED FOR EROSION AND SEDIMENT CONTROL ARE TO BE ENTRENCHED AT LEAST 6" INCHES BELOW GRADE, AND FOLDED ACCORDING TO THE DETAIL AS SHOWN.

ALL EROSION CONTROLS SHALL BE INSPECTED AT LEAST ONCE EVERY 7 CALENDAR DAYS AND WITHIN 24 HOURS AFTER ANY STORM EVENT PRODUCING GREATER THAN 1/2 INCH OF RAIN IN A 24 HOUR PERIOD. ALL EROSION CONTROLS MUST BE MAINTAINED DURING CONSTRUCTION BY REMOVING COMPACTED SILT AND SEDIMENT, AND REDISTRIBUTING IT AS IS APPROPRIATE. SEEDING AND MULCHING SHALL BE APPLIED IN ACCORDANCE WITH OHIO RAINWATER AND LAND DEVELOPMENT MANUAL TO ALL DISTURBED AREAS WITHIN 7 DAYS IF THE AREA IS AT FINAL GRADE OR IS TO REMAIN DORMANT FOR MORE THAN 14 DAYS.

ALL CATCH BASINS SHALL HAVE SEDIMENT INLET PROTECTION METHODS INSTALLED DURING CONSTRUCTION, USING THE DETAILS SHOWN ON THE PLAN.

FILL AREAS GRASS SEED MIXTURE:
½ # RED FESCUE PER 1,000 SQUARE FEET
½ # BLUEGRASS PER 1,000 SQUARE FEET
½ # DOMESTIC RYEGRASS PER 1,000 SQUARE FEET
2# PERENNIAL RYE PER 1,000 PER SQUARE FEET
FERTILIZE WITH 12# OF 10-10-10 PER 1,000 SQUARE FEET
MULCH WITH 3 BALES OF STRAW PER 1,000 SQUARE FEET

AN ASPHALT MULCH TIE DOWN AT THE RATE OF 5 GALLONS PER 1,000 SQUARE FEET SHALL BE USED.

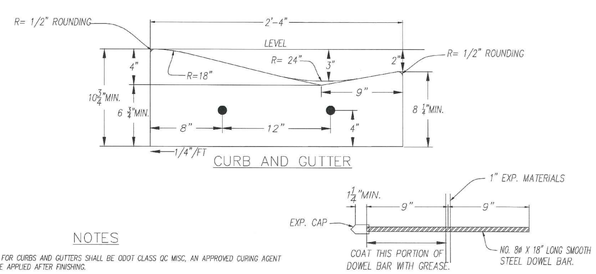

NOTES

(1) CONCRETE FOR CURBS AND GUTTERS SHALL BE ODOT CLASS QC MSC, AN APPROVED CURING AGENT SHALL BE APPLIED AFTER FINISHING.
(2) TWO SMOOTH STEEL DOWEL BARS, NO. 8, X 18 INCHES LONG, WITH EXPANSION CAPS SHALL BE INSTALLED AT EACH EXPANSION JOINT AS SHOWN ON THE DETAIL.
(5) ALL JOINTS SHALL BE VERTICAL AND EITHER PERPENDICULAR OR RADIAL TO THE BACK OF THE CURB.
(6) ALL EXPOSED EDGES SHALL BE ROUNDED TO 1/2" RADIUS.
(7) ALL CURBING SHALL BE BACKFILLED BEFORE PAVEMENT WORK IS BEGUN.
(8) REQUIREMENTS AS SHOWN WITH EXPANSION JOINTS AT RADII AND INLETS, IMPRESSED CONTRACTION JOINTS AT 10' SPACING BETWEEN EXPANSION JOINTS.
(9) SEE ODOT STANDARD CONSTRUCTION DRAWING BP-2.2 FOR ADDITIONAL DETAILS.

MILFORD OHIO	STANDARD CURB	DRAWING NO. T-4
	THE CITY OF MILFORD, OHIO	NO SCALE

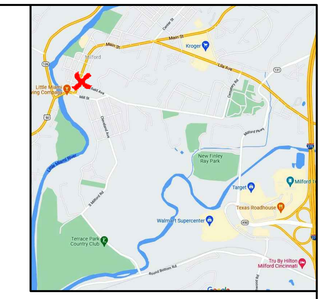

VICINITY MAP

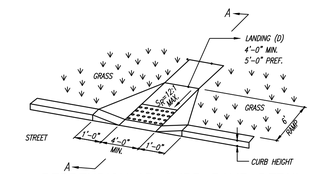

PERPENDICULAR CURB RAMP DETAIL
(Perpendicular With 1' Flared Sides)

LEGEND

The minimum length of a perpendicular ramp is 6' [2.0 m] from the back of a 6" [150] curb and may be increased where feasible to obtain a flatter ramp slope or to better blend with the walk configuration.

Gutter counter slopes at the foot of perpendicular curb ramps should not exceed 20:1 [0.05] over a distance of 2'-0" [610] from the curb.

Detectable Warnings (truncated domes) are to be installed in the location shown. Dimensions of the domes are 24" [610] from the back of the curb by the width of the ramp.

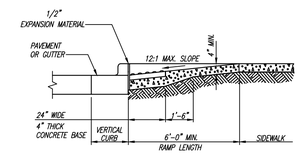

SECTION A-A
NORMAL DETAIL

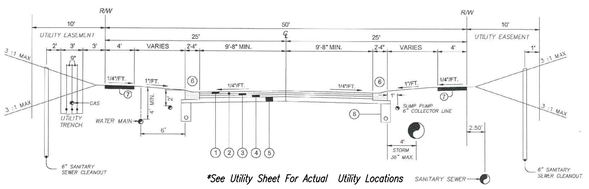

*See Utility Sheet For Actual Utility Locations

MIN. COVER	UTILITY
24"	GAS
24"	SUMP LINE
36"	ELECTRIC
36"	TELEPHONE
36"	CABLE TV
48"	WATER

1. ITEM 448 1 1/4" ASPHALT CONCRETE SURFACE COURSE, TYPE 1, PG64-22
2. ITEM 407 TACK COAT (APPLICATION RATE OF 0.1 GAL./SQ. YD.)
3. ITEM 448 2 1/4" ASPHALT CONCRETE INTERMEDIATE COURSE, TYPE 1 , PG64-22
4. ITEM 301 3" ASPHALT CONCRETE BASE
5. ITEM 304 8" AGGREGATE BASE
6. ITEM 609 STANDARD ROLL CURB AND GUTTER (SEE T-4)
7. ITEM 608 CONCRETE WALK, 5" THICK, CLASS C
8. ITEM 605 6"SHALLOW PIPE UNDERDRAIN

MILFORD OHIO	LOCAL STREET - CLASS 1 AGGREGATE BASE	DRAWING NO. T-18.7
	THE CITY OF MILFORD, OHIO	NO SCALE

CONDITIONS OF ORDINANCE 22-139 (R-3 SINGLE-FAMILY DISTRICT W/PD OVERLAY)

1. PROVIDE STORMWATER MAINTENANCE PLAN BEFORE APPROVAL OF FINAL PLAT.
2. THE CITY'S EMERGENCY SERVICES DEPARTMENTS SHALL APPROVE THE PRIVATE DRIVE WIDTH AND CUL DE SAC MEASUREMENTS.
3. NO ON-STREET PARKING IS PERMITTED.
4. PROVIDE TRUCK TURNING TEMPLATE DRAWING.
5. ACCESS DRIVE IS TO BE MAINTAINED BY HOA.
6. THE WATER LINE SHOULD BE LOOPED TO HIGH STREET.
7. WATER AND SEWER LINES ALONG THE ACCESS DRIVE ARE TO BE MAINTAINED BY HOA.
8. BUILDING MATERIALS TO BE REVIEWED AND APPROVED BY PLANNING COMMISSION.
9. INSTALL SIDEWALKS (PER CITY SPECIFICATIONS) ALONG GARFIELD AVENUE AND HIGH STREET IN THE RIGHT OF WAY.
10. PROVIDE PLANNING COMMISSION WITH A COPY OF THE HOA'S COVENANTS AND RESTRICTIONS FOR REVIEW DURING THE FINAL PLAN REVIEW.
11. THE COVENANTS AND RESTRICTIONS SHOULD BE RECORDED ALONG WITH THE FINAL DEVELOPMENT PLAN/PLAT IN THE OFFICE OF THE COUNTY RECORDER.
12. THE DEVELOPER TO PROVIDE A BEFORE DEVELOPMENT AND AFTER DEVELOPMENT IMPERVIOUS CALCULATION.
13. WMSC PERMIT REQUIRED BEFORE GRADING CAN BEGIN.
14. THE DEVELOPER MUST COMPLY WITH ALL BONDS AND SURETIES BEFORE FINAL PLAT APPROVAL.
15. THE HOA WILL BE RESPONSIBLE FOR THE INSPECTION AND MAINTENANCE OF THE STORMWATER UNDERGROUND DETENTION AREA.

EARTHWORK INFORMATION (APPROXIMATE – BASED ON FINAL GRADING PLAN)
TOPSOIL STRIPPING = 1,982 CUBIC YARDS
TOPSOIL REDISTRIBUTION = 1,982 CUBIC YARDS
EXCAVATION = 13,450 CUBIC YARDS
EMBANKMENT = 5,500 CUBIC YARDS
HAUL-OFF = 7,950 CUBIC YARDS

DEVELOPER:
REDKNOT HOMES
2841 WOODBURN AVENUE
CINCINNATI, OHIO 45206
(513) 623-0971

OHIO Utilities Protection SERVICE
Call Before You Dig
1-800-362-2764
811 Know what's below. Call before you dig.

QUEENS RIDGE @ MILFORD

Date 3-30-22
Drawn By J.C.
Checked By C.A.
Scale NONE

REVISIONS
5-4-22
DWG: DSGN\GR-DSGN

Sheet Title: TITLE SHEET
Project Title: QUEENS RIDGE @ MILFORD
CITY OF MILFORD
CLERMONT COUNTY, OHIO

Abercrombie & Associates, Inc.
Civil Engineering + Surveying
8111 Clewiso Road, Suite 200
Cincinnati, Ohio 45247
513-385-5757
www.abercrombie-associates.com

Job No. 21-0163

A) <u>STABILIZATION/NONSTRUCTURAL PRACTICES:</u> THE OPERATOR SHALL INSTALL ALL PERIMETER & EROSION CONTROL MEASURES POSSIBLE, BEFORE PROJECT BEGINS AND AS NEEDED DURING THE CONSTRUCTION PROCESS AND INITIATE APPROPRIATE VEGETATIVE PRACTICES ON ALL DISTURBED AREAS WITHIN SEVEN (7) DAYS IF THEY ARE TO REMAIN DORMANT (UNDISTURBED) FOR MORE THAN FOURTEEN (14) DAYS. FOR AREAS WITHIN FIFTY (50) FEET OF ANY STREAM, FIRST ORDER OR LARGER, SOIL STABILIZATION PRACTICES SHALL BE INITIATED WITHIN TWO (2) DAYS ON ALL INACTIVE, DISTURBED AREAS. PERMANENT OR TEMPORARY SOIL STABILIZATION SHALL BE APPLIED TO DISTURBED AREAS WITHIN SEVEN (7) DAYS AFTER FINAL GRADE IS REACHED ON ANY PORTION OF THE SITE. WHEN SEASONAL CONDITIONS PROHIBIT THE APPLICATION OF TEMPORARY OR PERMANENT SEEDING, NON-VEGETATIVE SOIL STABILIZATION PRACTICES SUCH AS MULCHING AND MATTING SHALL BE USED.

B) <u>STRUCTURAL PRACTICES:</u> STRUCTURAL PRACTICES SHALL BE USED TO CONTROL EROSION AND TRAP SEDIMENT FROM ALL SITES REMAINING DISTURBED FOR MORE THAN FOURTEEN (14) DAYS. SUCH PRACTICES MAY INCLUDE AMONG OTHERS SEDIMENT TRAPS, SEDIMENT BASINS, SILT FENCES, EARTH DIVERSION DIKES, CHECK DAMS AND STORM DRAIN INLET PROTECTION.

C) THIS PLAN SHALL NOT BE CONSIDERED ALL INCLUSIVE AS THE CONTRACTOR SHALL TAKE ALL NECESSARY PRECAUTIONS TO PREVENT SOIL SEDIMENT FROM LEAVING THE SITE. ADDITIONAL EROSION AND SEDIMENTATION CONTROL MEASURES WILL BE INSTALLED IF DEEMED NECESSARY BY AN ON-SITE INSPECTION.

1. <u>TIMING:</u> SEDIMENT CONTROL STRUCTURES SHALL BE FUNCTIONAL THROUGHOUT EARTH DISTURBING ACTIVITY. SEDIMENT PONDS AND PERIMETER SEDIMENT BARRIERS SHALL BE IMPLEMENTED AS THE FIRST STEP OF GRADING AND WITHIN SEVEN DAYS FROM THE START OF GRUBBING. THEY SHALL CONTINUE TO FUNCTION UNTIL THE UP SLOPE DEVELOPMENT AREA IS DESTABILIZED.

2. <u>SETTLING PONDS:</u> CONCENTRATED STORM WATER RUNOFF FROM DISTURBED AREAS FLOWING AT RATES WHICH EXCEED THE DESIGN CAPACITY OF SEDIMENT FENCES OR DIVERSIONS DIRECTING RUNOFF TO SETTLING FACILITIES, SHALL PROTECT ADJACENT PROPERTIES AND WATER RESOURCES FROM SEDIMENT TRANSPORTED BY SHEET FLOW.

3. <u>SEDIMENT BARRIERS:</u> SHEET FLOW RUNOFF FROM DENUDED AREAS SHALL BE INTERCEPTED BY SEDIMENT BARRIERS. SEDIMENT BARRIERS, SUCH AS SEDIMENT FENCES OF DIVERSIONS DIRECTING RUNOFF TO SETTLING FACILITIES, SHALL PROTECT ADJACENT PROPERTIES AND WATER RESOURCES FROM SEDIMENT TRANSPORTED BY SHEET FLOW.

4. <u>STREAM PROTECTION:</u> STRUCTURAL PRACTICES SHALL BE DESIGNED AND IMPLEMENTED ON SITE TO PROTECT ALL ADJACENT STREAMS, FIRST ORDER AND LARGER, FROM THE IMPACTS OF SEDIMENT RUNOFF.

5. OTHER EROSION AND SEDIMENT CONTROL PRACTICES SHALL PREVENT SEDIMENT LADEN WATER FROM ENTERING STORM DRAIN SYSTEMS, UNLESS THE STORM DRAIN SYSTEM DRAINS TO A SETTLING POND. THESE PRACTICES SHALL DIVERT RUNOFF FROM DISTURBED AREAS AND STEEP SLOPES WHERE PRACTICABLE AND STABILIZE CHANNELS AND OUTFALLS FROM EROSIVE FLOWS.

<u>MAINTENANCE</u> ALL TEMPORARY AND PERMANENT CONTROL PRACTICES SHALL BE MAINTAINED AND REPAIRED AS NEEDED TO ASSURE CONTINUED PERFORMANCE OF THEIR INTENDED FUNCTION. THE POLLUTION PREVENTION PLAN SHALL BE DESIGNED TO MINIMIZE MAINTENANCE REQUIREMENTS. THE APPLICANT SHALL PROVIDE A DESCRIPTION OF MAINTENANCE PROCEDURES NEEDED TO ASSURE THE CONTINUED PERFORMANCE OF CONTROL PRACTICES.

<u>INSPECTIONS</u> AT A MINIMUM, PROCEDURES IN A PLAN SHALL PROVIDE THAT ALL EROSIONS AND SEDIMENT CONTROLS ON THE SITE ARE INSPECTED AT LEAST ONCE EVERY SEVEN (7) CALENDAR DAYS AND WITHIN 24 HOURS AFTER ANY STORM EVENT GREATER THAN 0.5 INCH OF RAIN PER 24 HOUR PERIOD. IN ADDITION, QUALIFIED INSPECTION PERSONNEL (PROVIDED BY THE PERMITTEE) SHALL CONDUCT A WEEKLY INSPECTION OF THE CONSTRUCTION SITE TO IDENTIFY AREAS CONTRIBUTING TO STORM WATER DISCHARGES ASSOCIATED WITH CONSTRUCTION ACTIVITY AND EVALUATE WHETHER MEASURES TO PREVENT EROSION AND CONTROL POLLUTANT LOADINGS IDENTIFIED IN A STORM WATER POLLUTION PREVENTION PLAN ARE ADEQUATE AND PROPERLY IMPLEMENTED OR WHETHER ADDITIONAL CONTROL MEASURES ARE REQUIRED. DISTURBED AREAS AND AREAS USED FOR STORAGE OF MATERIALS THAT ARE EXPOSED TO PRECIPITATION SHALL BE INSPECTED FOR EVIDENCE OF, OR THE POTENTIAL FOR, POLLUTANTS ENTERING THE DRAINAGE SYSTEM. EROSION AND SEDIMENT CONTROL MEASURES IDENTIFIED IN THE PLAN SHALL BE OBSERVED TO ENSURE THAT THEY ARE OPERATING CORRECTLY. DISCHARGE LOCATIONS SHALL BE INSPECTED TO ASCERTAIN WHETHER EROSION AND SEDIMENT CONTROL MEASURES ARE EFFECTIVE IN PREVENTING SIGNIFICANT IMPACTS TO THE RECEIVING WATERS. LOCATIONS WHERE VEHICLES ENTER OR EXIT THE SITE SHALL BE INSPECTED FOR EVIDENCE OF OFF-SITE VEHICLE

THE PERMITTEE SHALL MAINTAIN FOR TWO (2) YEARS FOLLOWING THE SUBMITTAL OF THE N.O.T. A RECORD SUMMARIZING THE RESULTS OF THE INSPECTION, NAME(S) AND QUALIFICATIONS OF PERSONNEL MAKING THE INSPECTION, THE DATE(S) OF THE INSPECTION, MAJOR OBSERVATIONS RELATING TO THE IMPLEMENTATION OF THE STORM WATER POLLUTION PREVENTION PLAN AND A CERTIFICATION THAT THE FACILITY IS IN COMPLIANCE WITH THE PLAN AND THE PERMIT AND IDENTIFY ANY INCIDENTS OF NON-COMPLIANCE.

TECHNICAL STANDARD AND SPECIFICATIONS
CRITICAL AREA PLANTING – TEMPORARY SEEDING (TS)

<u>STANDARD</u>
<u>DEFINITION</u>

THE ESTABLISHMENT OF A TEMPORARY VEGETATIVE COVER ON DISTURBED AREAS BY SEEDING WITH THE APPROPRIATE RAPID GROWING PLANTS.

<u>PURPOSES</u>

1. TO REDUCE THE EROSION AND SEDIMENTATION BY STABILIZING DISTURBED AREAS WILL NOT BE BROUGHT TO FINAL GRADE FOR A YEAR OR LESS.
2. TO REDUCE PROBLEMS ASSOCIATED WITH MUD OR DUST FROM BARE SOIL SURFACES DURING CONSTRUCTION.
3. TO REDUCE SEDIMENT RUNOFF TO DOWNSTREAM AREAS AND IMPROVE THE VISUAL RESOURCES OF THE CONSTRUCTION AREA.

<u>CONDITIONS WHERE PRACTICE APPLIES</u>

ON EXPOSED SOIL SURFACES WHERE ADDITIONAL WORK (GRADING, ETC.) IS NOT SCHEDULED FOR A PERIOD OF THREE WEEKS TO LESS THAN ONE YEAR.

<u>PLANNING CONSIDERATIONS</u>

1. PROTECT THE AREA FROM EXCESS RUNOFF AS NECESSARY WITH DIVERSIONS, TERRACES, OR SEDIMENT BASINS.

2. EVALUATE THE CAPABILITIES AND LIMITATIONS OF THE SOIL TO BE SEEDED SPECIAL ATTENTION NEEDS TO BE GIVEN TO SOIL pH, TEXTURE, INTERNAL WATER MOVEMENT, STEEPNESS, AND STABILITY IN ORDER TO PLAN THE APPROPRIATE TREATMENT.

4. FERTILIZER, LIME, SEEDBED PREPARATION, SEED COVERAGE, MULCH, AND IRRIGATION SHOULD BE USED AS NECESSARY TO

<u>SPECIFICATIONS</u>

<u>I. SITE PREPARATION</u>

A. GRADE AS NEEDED AND FEASIBLE TO PERMIT THE USE OF CONVENTIONAL EQUIPMENT FOR SEEDBED PREPARATION, SEEDING, MULCH APPLICATION, AND ANCHORING.

B. INSTALL THE NEEDED EROSION CONTROL PRACTICES PRIOR TO SEEDING SUCH AS DIVERSIONS, TEMPORARY WATERWAYS FOR DIVERSIONS OUTLETS, AND SEDIMENT BASINS.

<u>II. SEEDBED PREPARATION</u>

A. <u>LIME</u> (IN LIEU OF A SOIL TEST RECOMMENDATION) ON ACID SOIL (pH 5.5 OR LOWER) AND SUBSOIL AT A RATE OF 100 POUNDS PER 1000 SQUARE FEET OR TWO TONS PER ACRE OF AGRICULTURAL GROUND LIMESTONE. FOR BEST RESULTS MAKE A SOIL TEST.

B. <u>FERTILIZER</u> (IN LIEU OF A SOIL TEST RECOMMENDATION) SHALL BE APPLIED AT A RATE OF 12-15 POUNDS PER 1000 SQUARE FEET OR 500-600 POUNDS PER ACRE OF 10-10-10 OR 12-12-12 ANALYSIS OR EQUIVALENT.

C. WORK THE LIME AND FERTILIZER INTO THE SOIL WITH A DISK HARROW, SPRINGTOOTH HARROW, OR SIMILAR TOOLS TO A DEPTH OF TWO INCHES. ON SLOPING AREAS THE FINAL OPERATION SHALL BE ON THE CONTOUR.

<u>III. SEEDING</u>

A. SPECIES SELECTION 1	PER 1000	
MARCH 1 TO AUGUST 15TH	SQUARE FEET	PER ACRE
1. OATS OR	3 LBS.	4 BU.
2. PERENNIAL RYEGRASS	1 LB.	40 LBS.
3. TALL FESCUE	1 LB.	40 LBS.
AUGUST 16 TO NOVEMBER 12		
1. RYE OR	3 LBS.	2 BU.
2. WHEAT OR	3 LBS.	2 BU.
3. PERENNIAL RYEGRASS	1 LB.	40 LBS.
4. TALL FESCUE	1 LB.	40 LBS.

1) OTHER SEED SPECIES MAY BE SUBSTITUTED CHECK WITH THE LOCAL SCS OFFICE FOR RECOMMENDATIONS.

2) AFTER NOVEMBER 1, USE MULCH ONLY. SEE STANDARD AND SPECIFICATIONS FOR MULCHING.

B. APPLY THE SEED UNIFORMLY WITH A CYCLONE SEEDER, DRILL, CULTIPACKER SEEDER, OR HYDROSEEDER, (SLURRY MAY INCLUDE SEED AND FERTILIZER) PREFERABLY ON A FIRM, MOIST SEEDBED. SEED WHEAT OR RYE NO DEEPER THAN ONE INCH. SEED RYEGRASS NO NO DEEPER THAN ONE-FOURTH INCH.

C. WHEN FEASIBLE, EXCEPT WHERE A CULTIPACKER TYPE SEEDER IS USED, THE SEEDBED SHOULD BE FIRMED FOLLOWING SEEDING OPERATIONS WITH A CULTIPACKERM, ROLLER, OR LIGHT DRAG. ON SLOPING LAND SEEDING OPERATIONS SHOULD BE ON THE CONTOUR WHEREVER POSSIBLE.

<u>IV. MULCHING</u>

A. MULCHING SHALL BE APPLIED TO PROTECT THE SOIL AND PROVIDE A BETTER ENVIRONMENT FOR PLANT GROWTH.

B. MULCH SHALL CONSIST OF SMALL GRAIN STRAW (PREFERABLY WHEAT OR RYE) AND SHALL BE APPLIED AT THE RATE OF TWO TONS PER ACRE OR 100 POUNDS (TWO TO THREE BALES) PER 1000 SQUARE

C. SPREAD THE MULCH UNIFORMLY BY HAND OR MECHANICALLY SO THE SOIL SURFACE IS COVERED.

D. MULCH ANCHORING METHODS:

1. <u>MECHANICAL</u> – USE A DISK, CRIMPER, OR SIMILAR TYPE TOOL SET STRAIGHT TO PUNCH OR ANCHOR THE MULCH MATERIAL INTO INTO THE SOIL.

2. <u>ASPHALT EMULSION</u> – APPLY AT THE RATE OF 160 GALLONS PER ACRE INTO THE MULCH AS IT IS BEING APPLIED.

3. <u>MULCH NETTINGS</u> – USE ACCORDING TO THE MANUFACTURER'S RECOMMENDATIONS. USE IN AREAS OF WATER CONCENTRATION TO HOLD MULCH IN PLACE.

<u>V. IRRIGATION</u>

IF SOIL MOISTURE IS DEFICIENT, SUPPLY NEW SEEDINGS WITH ADEQUATE WATER FOR PLANT GROWTH UNTIL THEY ARE FIRMLY ESTABLISHED. THIS IS ESPECIALLY TRUE WHEN SEEDINGS ARE MADE LATE IN THE PLANTING SEASON, IN ABNORMALLY DRY OR HOT SEASONS, OR ON ADVERSE SITES.

TECHNICAL STANDARD AND SPECIFICATIONS
CRITICAL AREA PLANTING – PERMANENT SEEDING (PS)
– DORMANT SEEDING (DS)

<u>STANDARD</u>
<u>DEFINITION</u>

THE ESTABLISHMENT OF PERENNIAL VEGETATION ON DISTURBED AREAS BY PLANTING SEED.

<u>PURPOSES</u>

1. TO REDUCE THE EROSION AND DECREASE SEDIMENT YIELD FROM DISTURBED AREAS.

2. TO PERMANENTLY STABILIZE DISTURBED AREAS IN A MANNER THIS IS ECONOMICAL, ADAPTABLE TO SITE CONDITIONS, AND ALLOWS SELECTION OF THE MOST APPROPRIATE PLANT MATERIALS.

CONDITIONS WHERE PRACTICE APPLIES

1. DISTURBED AREAS WHERE PERMANENT, LONG LIVED VEGETATIVE COVER IS NEEDED TO STABILIZE THE SOIL.

2. ROUGH GRADED AREAS WHICH WILL NOT BE BROUGHT TO FINAL GRADE FOR SEVERAL MONTHS OR MORE.

<u>PLANNING CONSIDERATIONS</u>

1. PROTECT THE AREA FROM EXCESS RUNOFF AS NECESSARY WITH DIVERSIONS, GRASSED WATERWAYS, TERRACES, OR SEDIMENT BASINS.

2. EVALUATE THE CAPABILITIES AND LIMITATIONS OF THE SOIL TO BE SEEDED. SPECIAL ATTENTION NEEDS TO BE GIVEN TO SOIL pH, TEXTURE, INTERNAL WATER MOVEMENT, STEEPNESS, AND STABILITY IN ORDER TO PLAN THE APPROPRIATE TREATMENT.

3. PLANT SPECIES SHOULD BE SELECTED ON THE BASIS OF SOIL TYPE, PLANNED USE OF THE AREA, AND THE AMOUNT OR DEGREE OF MAINTENANCE THAT CAN BE DEVOTED TO THE AREA IN THE FUTURE.

4. FERTILIZER, LIME, SEEDBED PREPARATION, SEED COVERAGE, MULCH, AND IRRIGATION SHOULD BE USED AS NECESSARY TO PROMOTE QUICK PLANT GROWTH.

5. VEGETATION CANNOT NOT BE EXPECTED TO PROVIDE EROSION CONTROL COVER AND PREVENT SOIL SLIPPAGE ON A SOIL THAT IS NOT STABLE DUE TO ITS STRUCTURE, WATER MOVEMENT, OR EXCESSIVE SLOPE.

SILT AND CLAY TO PROVIDE AN ADEQUATE AMOUNT OF MOISTURE HOLDING CAPACITY. AN EXCESSIVE AMOUNT OF POROUS SAND WILL CONSISTENTLY PROVIDE SUFFICIENT MOISTURE FOR GOOD GROWTH GROWTH REGARDLESS OF OTHER SOIL FACTORS.

B. WHERE COMPACTED SOILS OCCUR, THEY SHOULD BE BROKEN UP SUFFICIENTLY TO CREATE A FAVORABLE ROOTING DEPTH OF 6-8 INCHES.

C. STOCKPILE TOPSOIL TO APPLY TO SITES THAT ARE OTHERWISE UNSUITED FOR ESTABLISHING VEGETATION.

D. GRADE AS NEEDED AND FEASIBLE TO PERMIT THE USE OF CONVENTIONAL EQUIPMENT FOR SEEDBED PREPARATION, SEEDING, MULCHING APPLICATION AND ANCHORING, AND MAINTENANCE. AFTER THE GRADING OPERATION SPREAD TOPSOIL WHERE NEEDED.

E. INSTALL THE NEEDED EROSION CONTROL PRACTICES SUCH AS DIVERSIONS, GRASSED WATERWAYS, AND SEDIMENT BASINS.

<u>II. SEEDBED PREPARATION</u>

A. <u>LIME</u> (IN LIEU OF A SOIL TEST RECOMMENDATION) ON ACID SOIL AND SUBSOIL, 100 POUNDS PER 1000 SQUARE FEET OR TWO TONS PER ACRE OF AGRICULTURAL GROUND LIMESTONE. FOR BEST RESULTS MAKE A SOIL TEST.

B. <u>FERTILIZER</u> (IN LIEU OF A SOIL TEST RECOMMENDATION) APPLY 25 POUNDS PER 1000 SQUARE FEET OR 1000 POUNDS PER ACRE OF 10-10-10 OR 12-12-12 ANALYSIS. FOR BEST RESULTS MAKE A SOIL TEST.

C. WORK THE LIME AND FERTILIZER INTO THE SOIL WITH A DISK HARROW, SPRINGTOOTH HARROW, OR OTHER SUITABLE FIELD EQUIPMENT TO A DEPTH OF THREE INCHES. ON SLOPING LAND THE FINAL OPERATION SHALL BE ON THE CONTOUR.

<u>III. SEEDING</u>

A. SELECT A SPECIES OR MIXTURE APPROPRIATE FOR THE SITE.

1. PERMANENT SEEDING

<u>KIND OF SEED 1/</u>	<u>SEEDING DATES 2/</u>	<u>PER 1000 SQUARE FT.</u>	<u>PER ACRE</u>
A. CREEPING RED FESCUE, PLUS	MARCH-MAY AUG.-SEPT.	1/2 LB. <u>3/</u>	20 LBS.
DOMESTIC RYGRASS PLUS		1/4 LB.	10 LBS.
KENTUCKY BLUEGRASS		1/4 LB.	10 LBS.
B. TALL FESCUE	MARCH-MAY AUG.-SEPT.	1 LB. <u>3/</u>	40 LBS.
C. DWARF (TURF-TYPE) FESCUE <u>4/</u>	MARCH-MAY AUG.-SEPT.	1 LB.<u>3/</u>	40 LBS. <u>3/</u>

2. SPECIAL SEEDINGS-STEEP BANKS OR CUTS

<u>KIND OF SEED 1/</u>	<u>SEEDING DATES 2/</u>	<u>PER 1000 SQUARE FT.</u>	<u>PER ACRE</u>
A. TALL FESCUE	MARCH-MAY AUG.-SEPT.	1 LB.	40 LBS.
B. CROWNVETCH PLUS	MARCH-MAY AUG.-SEPT.	1/4 LB.	10 LBS.
C. FLAT PEA PLUS <u>4/</u> TALL FESCUE	MARCH-MAY AUGUST	1/2 LB.	20 LBS.
3. WATERWAYS AND ROAD DITCHES			
A. TALL FESCUE	MARCH-MAY	1 LB.	40 LBS.

1) OTHER SEED SPECIES MAY BE SUBSTITUTED FOR THESE MIXTURES. CHECK WITH LOCAL SCS OFFICE FOR RECOMMENDATIONS.

2) THESE SEEDING DATES ARE IDEAL. WITH THE USE OF MULCH AND IRRIGATION, SEEDINGS COULD BE MADE ANY TIME THROUGHOUT THE GROWING SEASON.

3) THE SEEDING RATES NEED TO BE INCREASED TWO TO THREE TIMES IF THE MIXTURE IS TO BE USED AS A LAWN.

4) THE DWARF OR TURF-TYPE FESCUES ARE MUCH SHORTER AND HAVE FINER LEAVES THAN THE TALL FESCUES. IT IS MUCH BETTER SUITED FOR LAWN-TYPE AREAS THAN TALL FESCUES.

B. DORMANT SEEDING

SEEDINGS SHOULD NOT BE PLANTED FROM OCTOBER 1 THROUGH NOVEMBER 20. DURING THIS PERIOD THE SEEDS ARE LIKELY TO GERMINATE BUT PROBABLY WILL NOT BE ABLE TO SURVIVE THE WINTER.

THE FOLLOWING METHODS MAY BE USED TO MAKE A "DORMANT SEEDING":

1. FROM OCTOBER 1 THROUGH NOVEMBER 20, PREPARE THE SEEDBED, ADD THE REQUIRED AMOUNTS OF LIME AND FERTILIZER THEN MULCH AND ANCHOR. AFTER NOVEMBER 20. AND BEFORE MARCH 15, THE SELECTED SEED MIXTURE. INCREASE THE SEEDING RATES BY SEED MIXTURE. INCREASE THE SEEDING RATES BY 50 PERCENT FOR THIS TYPE SEEDING.

2. FROM NOVEMBER 20 THROUGH MARCH 15, WHEN SOIL CONDITIONS PERMIT, PREPARE THE SEEDBED, LIME AND FERTILIZE, APPLY THE SELECTED SEED MIXTURE, AND MULCH AND ANCHOR. INCREASE THE SEEDING RATES BY 50 PERCENT FOR THIS TYPE OF SEEDING.

C. APPLY SEED UNIFORMLY WITH A CYCLONE SEEDER, DRILL, CULTIPACKER SEEDER, OR HYDROSEEDER (SLURRY MAY INCLUDE SEED AND FERTILIZER) ON A FIRM, MOIST SEEDBED. COVER TO A DEPTH OF 1/4 TO 1/2 INCH.

D. WHERE FEASIBLE, EXCEPT WHEN A CULTIPACKER TYPE SEEDER IS USED, THE SEEDBED SHOULD BE FIRMED FOLLOWING SEEDING OPERATIONS WITH A CULTIPACKER, ROLLER, OR LIGHT DRAG. ON SLOPING LAND SEEDING OPERATION'S SHOULD BE ON THE CONTOUR WHERE FEASIBLE.

<u>IV. MULCHING</u>

A. MULCH SHALL BE APPLIED TO PROTECT THE SOIL AND PROVIDE A BETTER ENVIRONMENT FOR PLANT GROWTH.

B. MULCH SHALL CONSIST OF SMALL GRAIN STRAW (PREFERABLY WHEAT OR RYE) AND SHALL BE APPLIED AT THE RATE OF TWO TONS PER ACRE OR 100 POUNDS (TWO TO THREE BALES) PER 1000 SQUARE FEET.

C. SPREAD THE MULCH UNIFORMLY BY HAND OR MECHANICALLY SO THE SOIL SURFACE IS COVERED.

2. ASPHALT EMULSION – APPLY AT A RATE OF 160 GALLONS PER ACRE INTO THE MULCH AS IT IS BEING APPLIED.

3. MULCH NETTINGS – USE ACCORDING TO THE MANUFACTURER'S RECOMMENDATIONS. USE IN AREAS OF WATER CONCENTRATION TO HOLD MULCH IN PLACE.

<u>V. MAINTENANCE</u>

1) MAINTENANCE IS A VITAL FACTOR IN MAINTAINING AN ADEQUATE VEGETATIVE EROSION CONTROL COVER.

2) IF STAND IS OVER 60 PERCENT DAMAGED, REESTABLISH FOLLOWING ORIGINAL LIME, FERTILIZER, SEEDBED PREPARATION, SEEDING RECOMMENDATIONS, AND MULCHING RECOMMENDATIONS.

TABLE 1
MAINTENANCE FERTILIZATION AND MOWING FOR PERMANENT SEEDING
<u>FERTILIZER RATE</u>

MIXTURE	FORMULA	LBS.AC.	LBS./1000	TIME	MOWING
CREEPING RED FESCUE, RYEGRASS KENTUCKY BLUEGRASS	10-10-10	500	12	FALL, YEARLY OR AS NEEDED	NOT CLOSER THAN 3"
TALL FESCUE	10-10-10	500	12	FALL, YEARLY OR AS NEEDED	NOT CLOSER THAN 4"
DWARF TURF	10-10-10	500	12	FALL, YEARLY OR AS NEEDED	NOT CLOSER THAN 2"
FLAT PEA AND CROWNVETCH WITH FESCUE	0-20-20	400	10	SPRING YEARLY FOLLOWING ESTABLISHMENT AND EVERY 4-7 YEARS THEREAFTER	DO NOT MOW

i. **WHEN PRACTICES REQUIRE REPAIR OR MAINTENANCE.** IF AN INSPECTION REVEALS THAT A CONTROL PRACTICE IS IN NEED OF REPAIR OR MAINTENANCE, WITH THE EXCEPTION OF A SEDIMENT SETTLING POND IT MUST BE REPAIRED OR MAINTAINED WITHIN THREE DAYS OF INSPECTION. SEDIMENT SETTLING PONDS MUST BE REPAIRED OR MAINTAINED WITHIN TEN DAYS OF THE INSPECTION.

ii. **WHEN PRACTICES FAIL TO PROVIDE THEIR INTENDED FUNCTION.** IF THE INSPECTION REVEALS THAT A CONTROL PRACTICE FAILS TO PERFORM ITS INTENDED FUNCTION AND THAT ANOTHER, MORE APPROPRIATE CONTROL PRACTICE IS REQUIRED, THE SWP3 SHALL BE AMENDED AND THE NEW CONTROL PRACTICE SHALL BE INSTALLED WITHIN TEN DAYS OF THE INSPECTION.

iii. **WHEN PRACTICES DEPICTED ON THE SWP3 ARE NOT INSTALLED.** IF THE INSPECTION REVEALS THAT A CONTROL PRACTICE HAS NOT BEEN IMPLEMENTED IN ACCORDANCE WITH THE SCHEDULE CONTAINED IN PART III.G.1.g OF THE OHIO EPA GENERAL PERMIT, THE CONTROL PRACTICE SHALL BE IMPLEMENTED WITHIN 10 DAYS FROM THE DATE OF THE INSPECTION. IF THE INSPECTION REVEALS THAT THE PLANNED CONTROL PRACTICE IS NOT NEEDED, THE RECORD MUST CONTAIN A STATEMENT OF EXPLANATION AS TO WHY THE CONTROL PRACTICE IS NOT NEEDED.

MULCH BERM DETAIL

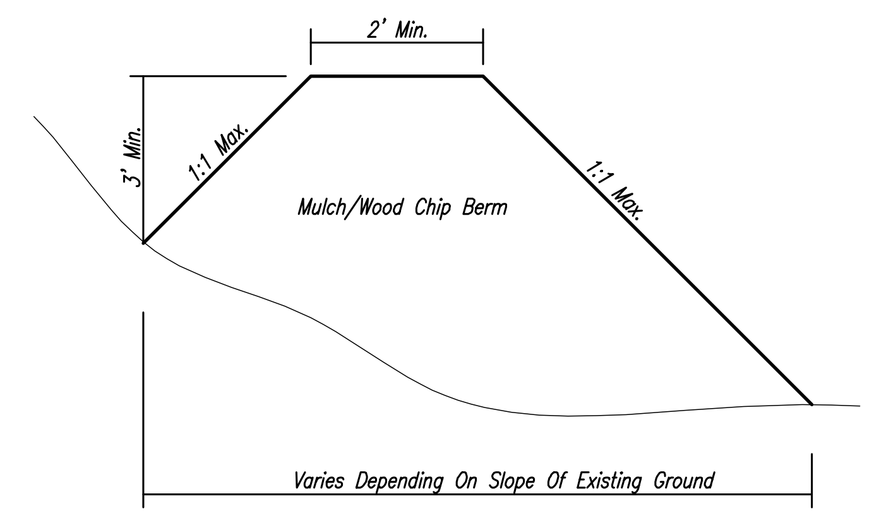


Stormwater Best Management Practice: Concrete Washout

Washout Containers

Chute washout box

Chute washout bucket and pump

Hay bale and plastic washout pit

Vinyl washout container

Metal washout container

CONSTRUCTION ENTRANCE DETAIL

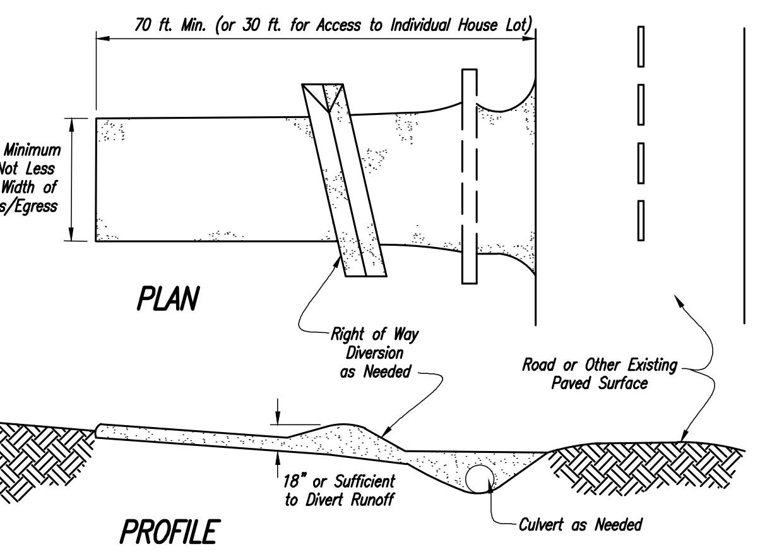

SEE THE RAINWATER AND LAND DEVELOPMENT, OHIO'S STANDARDS FOR STORMWATER MANAGEMENT, LAND DEVELOPMENT AND URBAN STREAM PROTECTION, CURRENT EDITION, MANUAL FOR CONSTRUCTION ENTRANCE SPECIFICATIONS.

SPECIFICATIONS FOR SILT FENCE

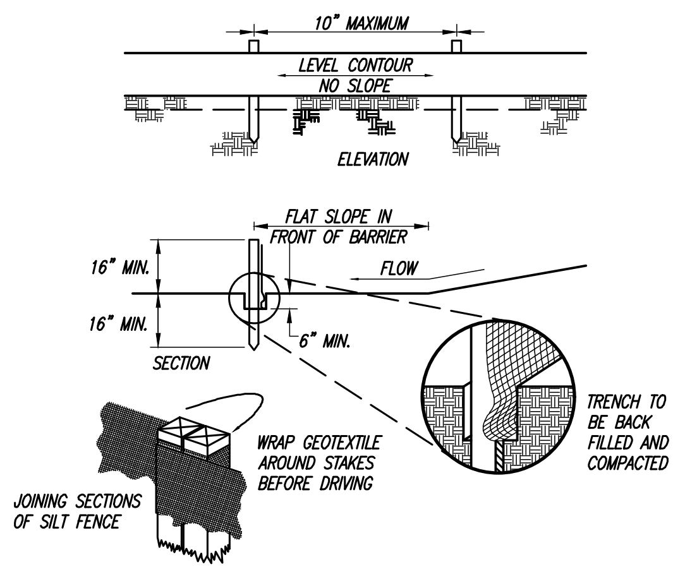

SEE THE RAINWATER AND LAND DEVELOPMENT, OHIO'S STANDARDS FOR STORMWATER MANAGEMENT, LAND DEVELOPMENT AND URBAN STREAM PROTECTION MANUAL, CURRENT EDITION, FOR SILT FENCE SPECIFICATIONS.

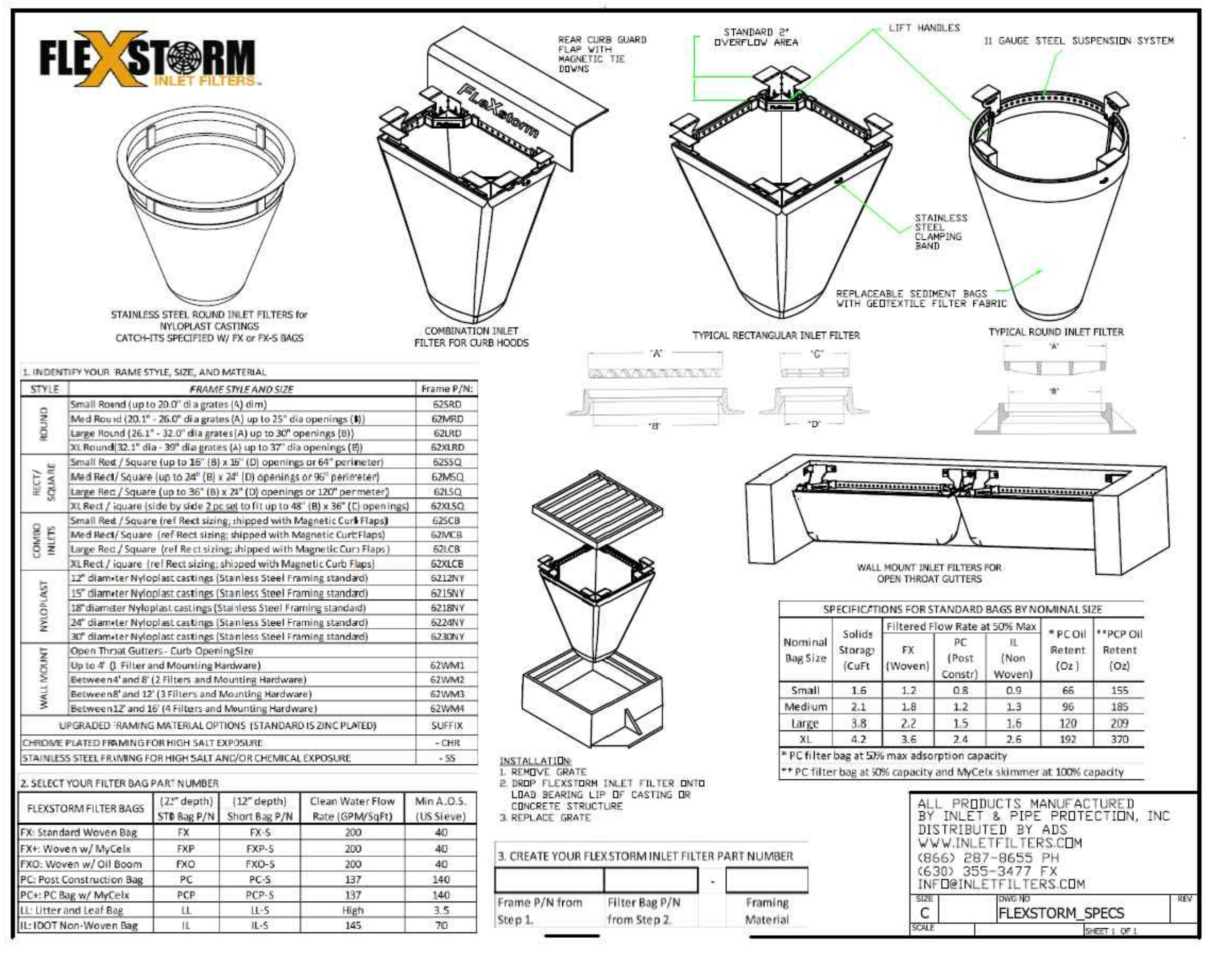
FLEXSTORM INLET FILTERS

1. INDENTIFY YOUR INLET STYLE, SIZE, AND MATERIAL

2. SELECT YOUR FLEXSTORM FILTER BAG PART NUMBER

3. CREATE YOUR FLEXSTORM INLET FILTER PART NUMBER

ALL PRODUCTS MANUFACTURED BY INLET & PIPE PROTECTION, INC
WWW.INLETFILTERS.COM

FLEXSTORM_SPECS

<u>**EROSION CONTROL INSPECTION NOTE:**</u>
THE DEVELOPER AND/OR CONTRACTOR SHALL CONDUCT AND DOCUMENT WEEKLY EROSION CONTROLS INSPECTIONS OR AFTER EACH 0.25" OR GREATER RAIN EVENT. THE INSPECTION REPORTS SHALL BE KEPT FOR THREE YEARS AFTER THE NOTICE OF TERMINATION HAS BEEN FILED WITH OHIO EPA.

<u>**CONSTRUCTION ENTRANCE AND STREET SWEEPING NOTE:**</u>
THE CONTRACTOR SHALL TOP-DRESS THE CONSTRUCTION ENTRANCE ON A REGULAR BASIS AND IMPLEMENT STREET SWEEPING AS NEEDED. THE CONTRACTOR SHALL NOT CREATE A PUBLIC SAFETY PROBLEM BY TRACKING SEDIMENT ONTO TRAVELED WAYS. THE CONTRACTOR SHALL NOT HAUL MATERIALS DURING RAIN DAYS.

A. EROSION AND SEDIMENT CONTROLS. THE CONTRACTOR SHALL DESIGN, INSTALL AND MAINTAIN EFFECTIVE EROSION CONTROLS AND SEDIMENT CONTROLS TO MINIMIZE THE DISCHARGE OF POLLUTANTS. AT A MINIMUM, SUCH CONTROLS SHALL BE INSTALLED AND MAINTAINED TO:

1. CONTROL STORM WATER VOLUME AND VELOCITY WITHIN THE SITE TO MINIMIZE SOIL EROSION;

2. CONTROL STORM WATER DISCHARGES, INCLUDING BOTH PEAK FLOWRATES AND TOTAL STORM WATER VOLUME, TO MINIMIZE EROSION AT OUTLETS AND TO MINIMIZE DOWNSTREAM CHANNEL AND STREAMBANK EROSION;

3. MINIMIZE THE AMOUNT OF SOIL EXPOSED DURING CONSTRUCTION ACTIVITY;

4. MINIMIZE THE DISTURBANCE OF STEEP SLOPES;

5. MINIMIZE SEDIMENT DISCHARGES FROM THE SITE. THE DESIGN, INSTALLATION AND MAINTENANCE OF EROSION AND SEDIMENT CONTROLS SHALL ADDRESS FACTORS SUCH AS THE AMOUNT, FREQUENCY, INTENSITY AND DURATION OF PRECIPITATION, THE NATURE OF RESULTING STORM WATER RUNOFF, AND SOIL CHARACTERISTICS, INCLUDING THE RANGE OF SOIL PARTICLE SIZES EXPECTED TO BE PRESENT ON THE SITE;

6. MINIMIZE SOIL COMPACTION AND, UNLESS INFEASIBLE, PRESERVE TOPSOIL.

B. SOIL STABILIZATION. STABILIZATION OF DISTURBED AREAS SHALL, AT A MINIMUM, BE INITIATED IN ACCORDANCE WITH THE TIME FRAMES SPECIFIED IN THE FOLLOWING TABLES.

TABLE 1: PERMANENT STABILIZATION

AREA REQUIRING PERMANENT STABILIZATION	TIME FRAME TO APPLY EROSION CONTROLS
ANY AREAS THAT WILL LIE DORMANT FOR ONE YEAR OR MORE	WITHIN SEVEN DAYS OF THE MOST RECENT DISTURBANCE
ANY AREAS WITHIN 50 FEET OF A SURFACE WATER OF THE STATE AND AT FINAL GRADE	WITHIN TWO DAYS OF REACHING FINAL GRADE
ANY OTHER AREAS AT FINAL GRADE	WITHIN SEVEN DAYS OF REACHING FINAL GRADE WITHIN THAT AREA

TABLE 2: TEMPORARY STABILIZATION

AREA REQUIRING TEMPORARY STABILIZATION	TIME FRAME TO APPLY EROSION CONTROLS
ANY DISTURBED AREAS WITHIN 50 FEET OF A SURFACE WATER OF THE STATE AND NOT AT FINAL GRADE	WITHIN TWO DAYS OF THE MOST RECENT DISTURBANCE IF THE AREA WILL REMAIN IDLE FOR MORE THAN 14 DAYS
FOR ALL CONSTRUCTION ACTIVITIES, ANY DISTRUCBED AREAS THAT WILL BE DORMANT FOR MORE THAN 14 DAYS BUT LESS THAN ONE YEAR, AND NOT WITHIN 50 FEET OF A SURFACE WATER OF THE STATE	WITHIN SEVEN DAYS OF THE MOST RECENT DISTURBANCE WITHIN THE AREA FOR RESIDENTIAL SUBDIVISIONS, DISTURBED AREAS MUST BE STABILIZED AT LEAST SEVEN DAYS PRIOR TO TRANSFER OF PERMIT COVERAGE FOR THE INDIVIDUAL LOT(S)
DISTURBED AREAS THAT WILL BE IDLE OVER WINTER	PRIOR TO THE ONSET OF WINTER WEATHER

WHERE VEGETATIVE STABILIZATION TECHNIQUES MAY CAUSE STRUCTURAL INSTABILITY OR ARE OTHERWISE UNOBTAINABLE, ALTERNATIVE STABILIZATION TECHNIQUES MUST BE EMPLOYED. PERMANENT AND TEMPORARY STABILIZATION ARE DEFINED IN PART VII.

C. DEWATERING. DISCHARGES FROM DEWATERING ACTIVITIES, INCLUDING DISCHARGES FROM DEWATERING OF TRENCHES AND EXCAVATIONS, ARE PROHIBITED UNLESS MANAGED BY APPROPRIATE CONTROLS.

D. POLLUTION PREVENTION MEASURES. INSTALL, IMPLEMENT AND MAINTAIN EFFECTIVE POLLUTION PREVENTION MEASURES TO MINIMIZE THE DISCHARGE OF POLLUTANTS. AT A MINIMUM, SUCH MEASURES MUST BE INSTALLED, IMPLEMENTED AND MAINTAINED TO:

1. MINIMIZE THE DISCHARGE OF POLLUTANTS FROM EQUIPMENT AND VEHICLE WASHING, WHEEL WASH WATER, AND OTHER WASH WATERS. WASH WATERS SHALL BE TREATED IN A SEDIMENT BASIN OR ALTERNATIVE CONTROL THAT PROVIDES EQUIVALENT OR BETTER TREATMENT PRIOR TO DISCHARGE;

2. MINIMIZE THE EXPOSURE OF BUILDING MATERIALS, BUILDING PRODUCTS, CONSTRUCTION WASTES, TRASH, LANDSCAPE MATERIALS, FERTILIZERS, PESTICIDES, HERBICIDES, DETERGENTS, SANITARY WASTE AND OTHER MATERIALS PRESENT ON THE SITE TO PRECIPITATION AND TO STORM WATER; AND

3. MINIMIZE THE DISCHARGE OF POLLUTANTS FROM SPILLS AND LEAKS AND IMPLEMENT CHEMICAL SPILL AND LEAK PREVENTION AND RESPONSE PROCEDURES.

E. PROHIBITED DISCHARGES. THE FOLLOWING DISCHARGES ARE PROHIBITED:

1. WASTEWATER FROM WASHOUT OF CONCRETE, UNLESS MANAGED BY AN APPROPRIATE CONTROL;

2. WASTEWATER FROM WASHOUT AND CLEANOUT OF STUCCO, PAINT, FORM RELEASE OILS, CURING COMPOUNDS AND OTHER CONSTRUCTION MATERIALS;

3. FUELS, OILS, OR OTHER POLLUTANTS USED IN VEHICLE AND EQUIPMENT OPERATION AND MAINTENANCE; AND

4. SOAPS OR SOLVENTS USED IN VEHICLE AND EQUIPMENT WASHING.

g. <u>OTHER CONTROLS.</u>

i. **NON-SEDIMENT POLLUTANT CONTROLS.** NO SOLID (OTHER THAN SEDIMENT) OR LIQUID WASTE, INCLUDING BUILDING MATERIALS, SHALL BE DISCHARGED IN STORM WATER RUNOFF. THE PERMITTEE MUST IMPLEMENT ALL NECESSARY BMPS TO PREVENT THE DISCHARGE OF NON-SEDIMENT POLLUTANTS TO THE DRAINAGE SYSTEM OF THE SITE OR SURFACE WATERS OF THE STATE. UNDER NO CIRCUMSTANCE SHALL WASTEWATER FROM THE WASHOUT OF CONCRETE TRUCKS, STUCCO, PAINT, FORM RELEASE OILS, CURING COMPOUNDS, AND OTHER CONSTRUCTION MATERIALS BE DISCHARGED DIRECTLY INTO A DRAINAGE CHANNEL, STORM SEWER OR SURFACE WATERS OF THE STATE. ALSO, NO POLLUTANTS FROM VEHICLE FUEL, OILS, OR OTHER VEHICLE FLUIDS CAN BE DISCHARGED TO SURFACE WATERS OF THE STATE. NO EXPOSURE OF STORM WATER TO WASTE MATERIALS IS RECOMMENDED. THE CONTRACTOR SHALL IMPLEMENT MEASURES TO PREVENT AND RESPOND TO CHEMICAL SPILLS AND LEAKS.

i. **OFF-SITE TRAFFIC.** OFF-SITE VEHICLE TRACKING OF SEDIMENTS AND DUST GENERATION SHALL BE MINIMIZED. THE CONTRACTOR SHALL IMPLEMENT METHODS TO MINIMIZE THE DISCHARGE OF POLLUTANTS FROM EQUIPMENT AND VEHICLE WASHING, WHEEL WASH WATER, AND OTHER WASH WATERS. NO DETERGENTS MAY BE USED TO WASH VEHICLES. WASH WATERS SHALL BE TREATED IN A SEDIMENT BASIN OR ALTERNATIVE CONTROL THAT PROVIDES EQUIVALENT TREATMENT PRIOR TO DISCHARGE.

ii. **TRENCH AND GROUND WATER CONTROL.** THERE SHALL BE NO TURBID DISCHARGES TO SURFACE WATERS OF THE STATE RESULTING FROM DEWATERING ACTIVITIES. IF TRENCH OR GROUND WATER CONTAINS SEDIMENT, IT SHALL PASS THROUGH A SEDIMENT SETTLING POND OR OTHER EQUALLY EFFECTIVE SEDIMENT CONTROL DEVICE, PRIOR TO BEING DISCHARGED FROM THE CONSTRUCTION SITE. ALTERNATIVELY, SEDIMENT MAY BE REMOVED BY SETTLING IN PLACE OR BY DEWATERING INTO A SUMP PIT, FILTER BAG OR COMPARABLE PRACTICE. GROUND WATER WHICH DOES NOT CONTAIN SEDIMENT OR OTHER POLLUTANTS IS NOT REQUIRED TO BE TREATED PRIOR TO DISCHARGE. HOWEVER, CARE MUST BE TAKEN WHEN DISCHARGING GROUND WATER TO ENSURE THAT IT DOES NOT BECOME POLLUTANT- LADEN BY TRAVERSING OVER DISTURBED SOILS OR OTHER POLLUTANT SOURCES.

iii. **CONTAMINATED SEDIMENT.** WHERE CONSTRUCTION ACTIVITIES ARE TO OCCUR ON SITES WITH CONTAMINATION FROM PREVIOUS ACTIVITIES, OPERATORS SHALL BE AWARE THAT CONCENTRATIONS OF MATERIALS THAT MEET OTHER CRITERIA (IS NOT CONSIDERED A HAZARDOUS WASTE, MEETING VAP STANDARDS, ETC.) MAY STILL RESULT IN STORM WATER DISCHARGES IN EXCESS OF OHIO WATER QUALITY STANDARDS. SUCH DISCHARGES ARE NOT AUTHORIZED BY THIS PERMIT. APPROPRIATE BMPS INCLUDE, BUT ARE NOT LIMITED TO:

- THE USE OF BERMS, TRENCHES, AND PITS TO COLLECT CONTAMINATED RUNOFF AND PREVENT DISCHARGES;
- PUMPING RUNOFF INTO A SANITARY SEWER (WITH PRIOR APPROVAL OF THE SANITARY SEWER OPERATOR) OR INTO A CONTAINER FOR TRANSPORT TO AN APPROPRIATE TREATMENT/DISPOSAL FACILITY; AND
- COVERING AREAS OF CONTAMINATION WITH TARPS OR OTHER METHODS THAT PREVENT STORM WATER FROM COMING INTO CONTACT WITH THE MATERIAL.

B. <u>MAINTENANCE.</u> ALL TEMPORARY AND PERMANENT CONTROL PRACTICES SHALL BE MAINTAINED AND REPAIRED AS NEEDED TO ENSURE CONTINUED PERFORMANCE OF THEIR INTENDED FUNCTION. ALL SEDIMENT CONTROL PRACTICES MUST BE MAINTAINED IN A FUNCTIONAL CONDITION UNTIL ALL UP SLOPE AREAS THEY CONTROL ARE PERMANENTLY STABILIZED.

C. <u>IINSPECTIONS.</u> AT A MINIMUM, ALL EROSION AND SEDIMENT POLLUTION CONTROLS ON THE SITE SHALL BE INSPECTED BY THE OWNER'S QUALIFIED INSPECTION PERSONNEL AT LEAST ONCE EVERY SEVEN (7) CALENDAR DAYS AND BY THE END OF THE NEXT CALENDAR DAY AFTER ANY STORM EVENT GREATER THAN ONE-HALF (½) INCH OF RAIN PER 24-HOUR PERIOD, EXCLUDING WEEKENDS AND HOLIDAYS UNLESS WORK IS SCHEDULED. A RECORD SHALL BE MADE OF EACH INSPECTION. THE OWNER SHALL ASSIGN QUALIFIED INSPECTION PERSONNEL TO CONDUCT THESE INSPECTIONS TO ENSURE THAT THE EROSION AND SEDIMENT CONTROLS ARE ADEQUATE AND PROPERLY IMPLEMENTED OR CONSTRUCTED IN ACCORDANCE WITH THE APPROVED IMPROVEMENT PLAN, AND TO DETERMINE WHETHER OTHER EROSION AND SEDIMENT POLLUTION CONTROLS ARE REQUIRED. THE QUALIFIED INSPECTION PERSONNEL SHALL RECORD AND REPORT ISSUES AND DEFICIENCIES ASSOCIATED WITH THE EROSION AND SEDIMENT POLLUTION CONTROLS. A PROFESSIONAL ENGINEER MUST DETERMINE NECESSARY CHANGES TO THE LOCATION AND POSITION EACH EROSION AND SEDIMENT POLLUTION CONTROL. AT A MINIMUM, THE INSPECTION REPORT SHOULD INCLUDE ITEMS AS LISTED UNDER ITEM 314 (D) 1 THRU 10 OF THE HAMILTON COUNTY EARTHWORK REGULATIONS.

AT A MINIMUM, THE INSPECTION REPORT SHALL INCLUDE:

i. THE INSPECTION DATE;
ii. NAMES, TITLES, AND QUALIFICATIONS OF PERSONNEL MAKING THE INSPECTION;
iii. WEATHER INFORMATION FOR THE PERIOD SINCE THE LAST INSPECTION (OR SINCE COMMENCEMENT OF CONSTRUCTION ACTIVITY IF THE FIRST INSPECTION) INCLUDING A BEST ESTIMATE OF THE BEGINNING OF EACH STORM EVENT, DURATION OF EACH STORM EVENT, APPROXIMATE AMOUNT OF RAINFALL FOR EACH STORM EVENT (IN INCHES), AND WHETHER ANY DISCHARGES OCCURRED;
iv. WEATHER INFORMATION AND A DESCRIPTION OF ANY DISCHARGES OCCURRING A THE TIME OF THE INSPECTION;
v. LOCATION(S) OF DISCHARGES OF SEDIMENT OR OTHER POLLUTANTS FROM THE SITE;
vi. LOCATION(S) OF BMPs THAT NEED TO BE MAINTAINED;
vii. LOCATION(S) OF BMPs THAT FAILED TO OPERATE AS DESIGNED OR PROVED INADEQUATE FOR PARTICULAR LOCATION;
viii. LOCATION(S) WHERE ADDITIONAL BMPs ARE NEEDED THAT DID NOT EXIST AT THE TIME OF INSPECTION; AND
ix. CORRECTIVE ACTION REQUIRED INCLUDING ANY CHANGES TOT HE SWP3 NECESSARY AND IMPLEMENTATION DATES.

OHIO Utilities Protection SERVICE
Call Before You Dig
1-800-362-2764

811
Know what's below.
Call before you dig.

QUEENS RIDGE @ MILFORD

Date 3-30-22
Drawn By J.C.
Checked By C.A.
Scale NONE

REVISIONS
5-4-22

DWG: DSGN\GR-DSGN

Sheet Title EROSION CONTROL NOTES & DETAILS

Project Title
QUEENS RIDGE @ MILFORD
CITY OF MILFORD
CLERMONT COUNTY, OHIO

Abercrombie
& Associates, Inc.
Civil Engineering + Surveying
8111 Cheviot Road, Suite 200
Cincinnati, Ohio 45247
513-385-5757
www.abercrombie-associates.com

Job No. 21-0163

2
8

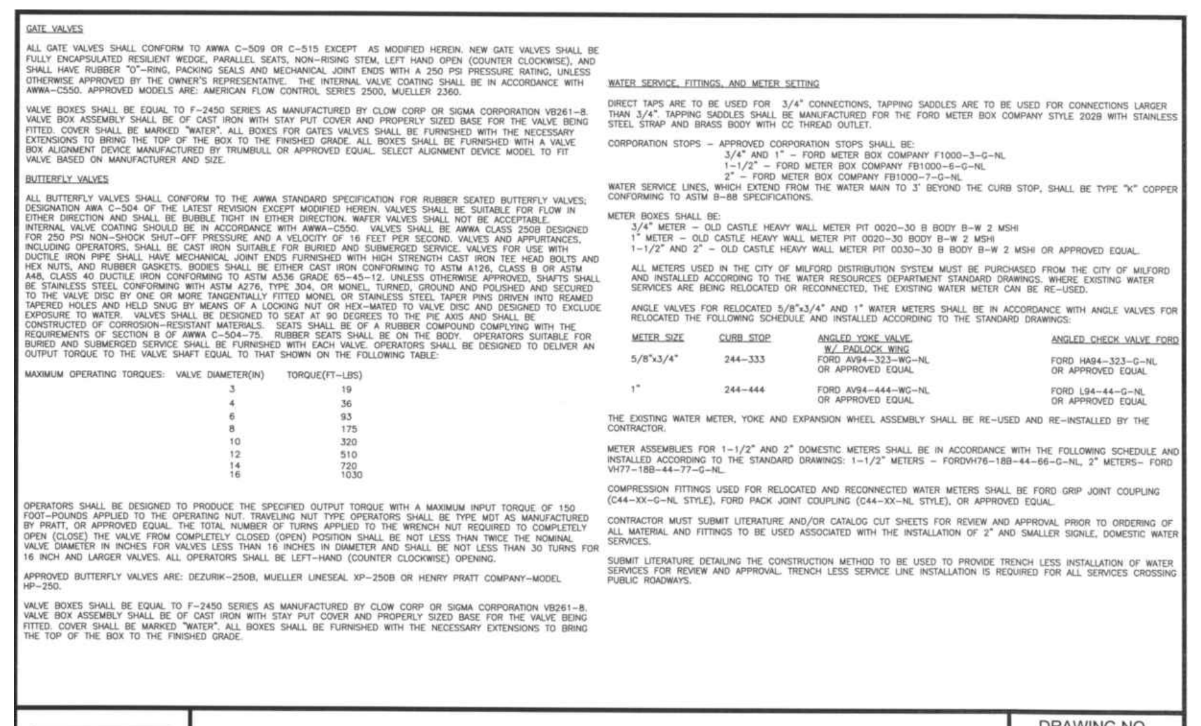

MILFORD OHIO

GENERAL WATER NOTES 2

THE CITY OF MILFORD, OHIO

DRAWING NO. W-1.2

NO SCALE

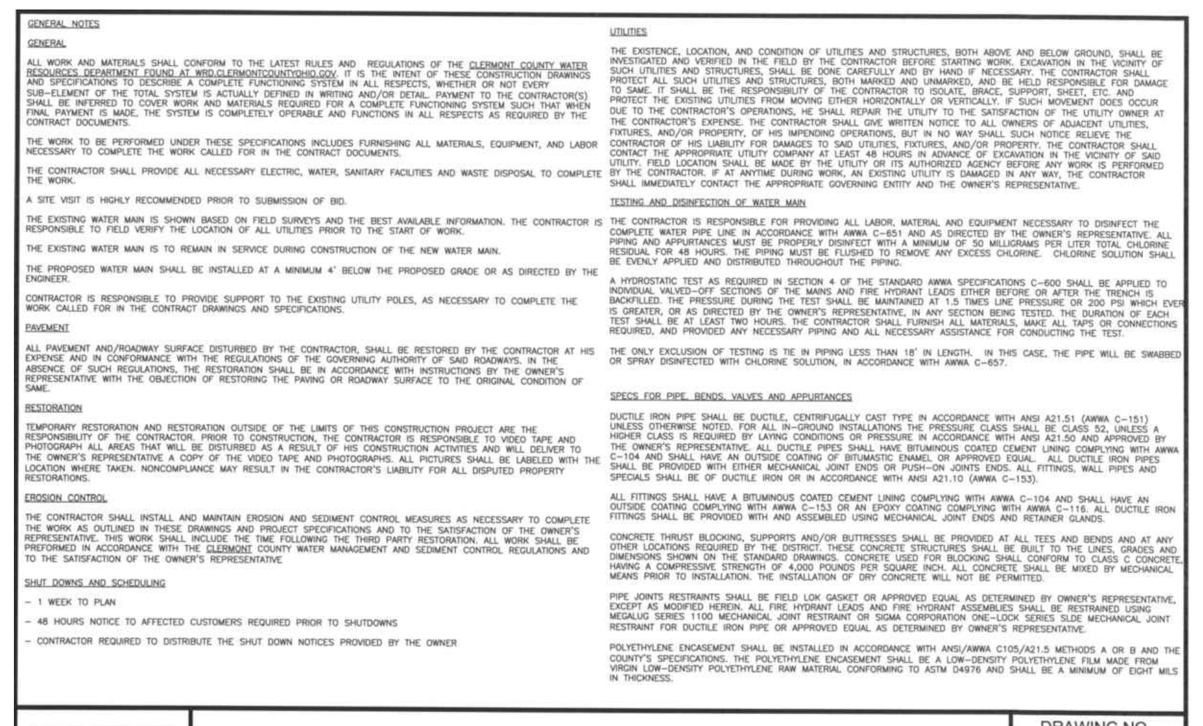

MILFORD OHIO

GENERAL WATER NOTES

THE CITY OF MILFORD, OHIO

DRAWING NO. W-1

NO SCALE

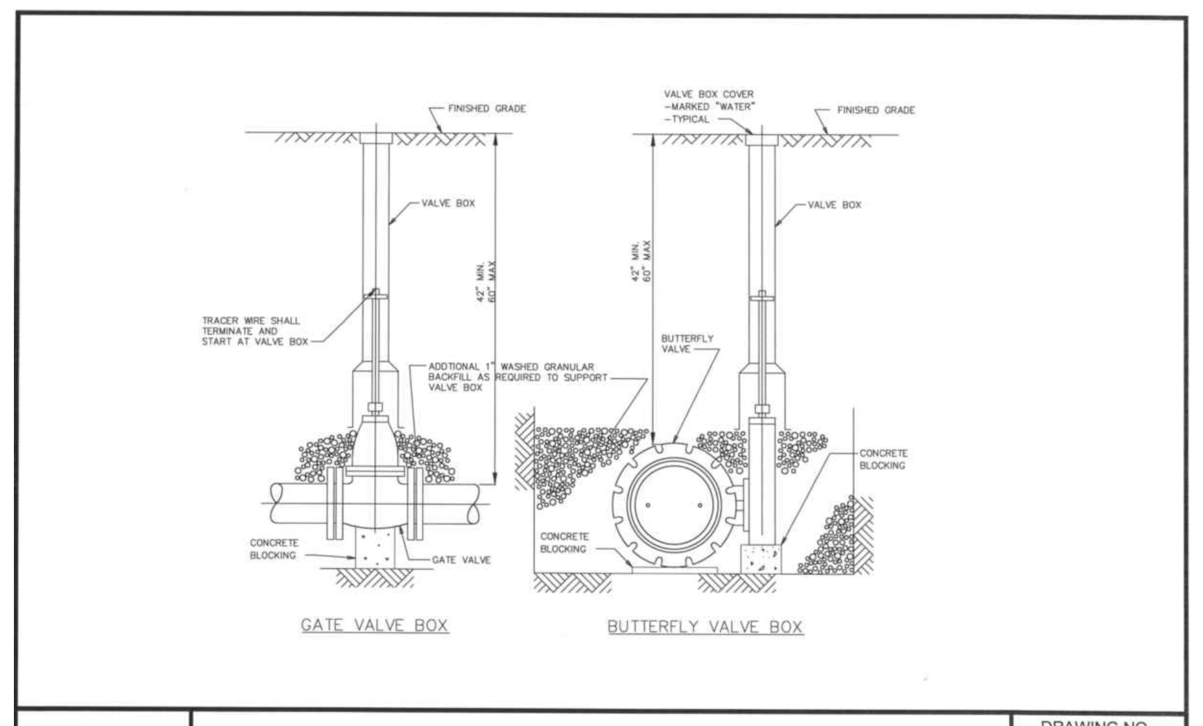

MILFORD OHIO

GATE AND BUTTERFLY VALVES

THE CITY OF MILFORD, OHIO

DRAWING NO. W-2

NO SCALE

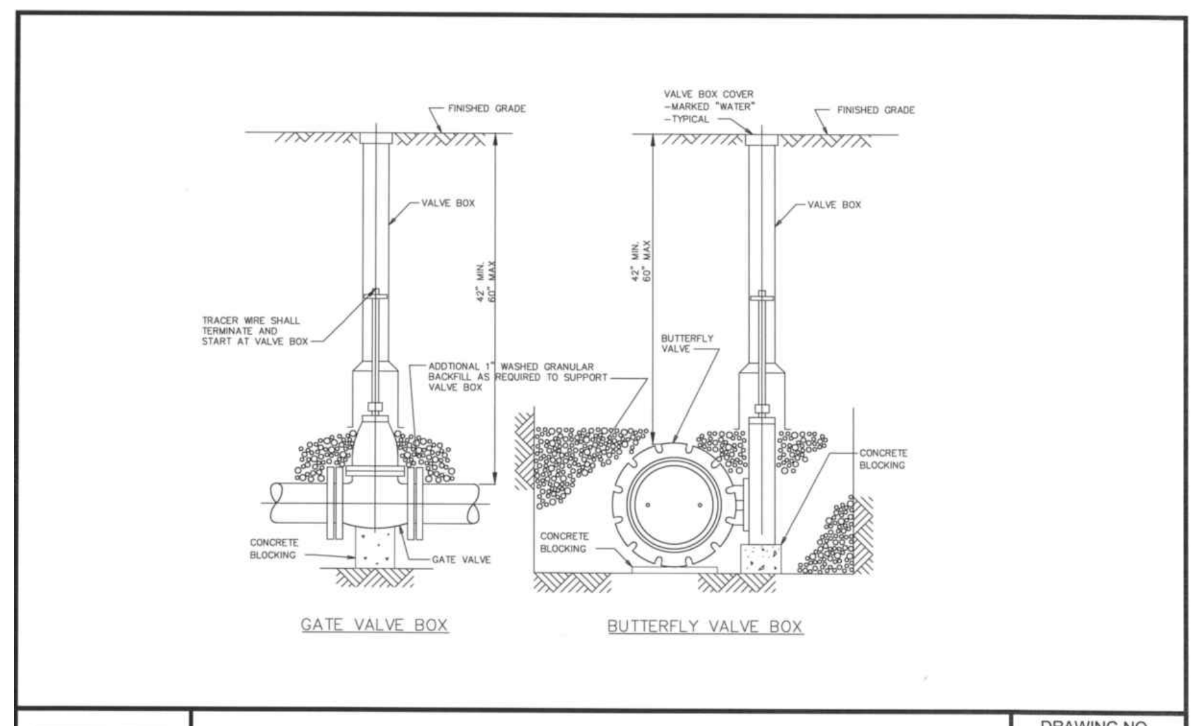

MILFORD OHIO

GATE AND BUTTERFLY VALVES

THE CITY OF MILFORD, OHIO

DRAWING NO. W-2

NO SCALE

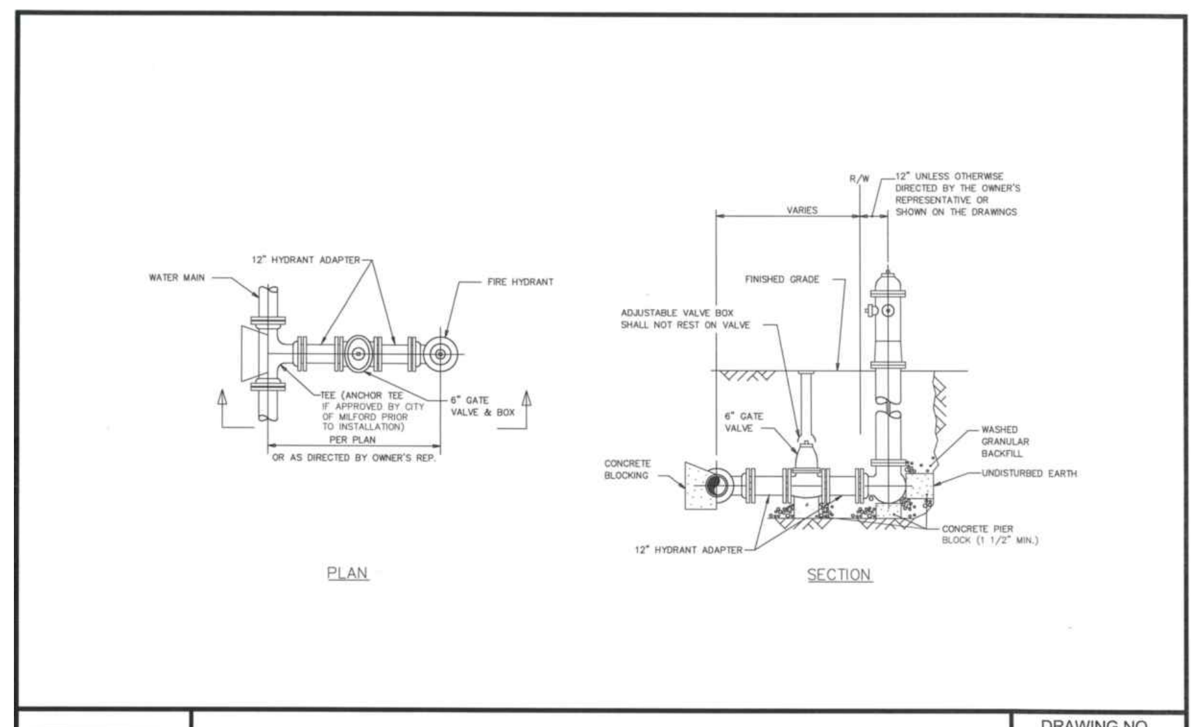

MILFORD OHIO

FIRE HYDRANT LAYOUT AND ASSEMBLY

THE CITY OF MILFORD, OHIO

DRAWING NO. W-4

NO SCALE

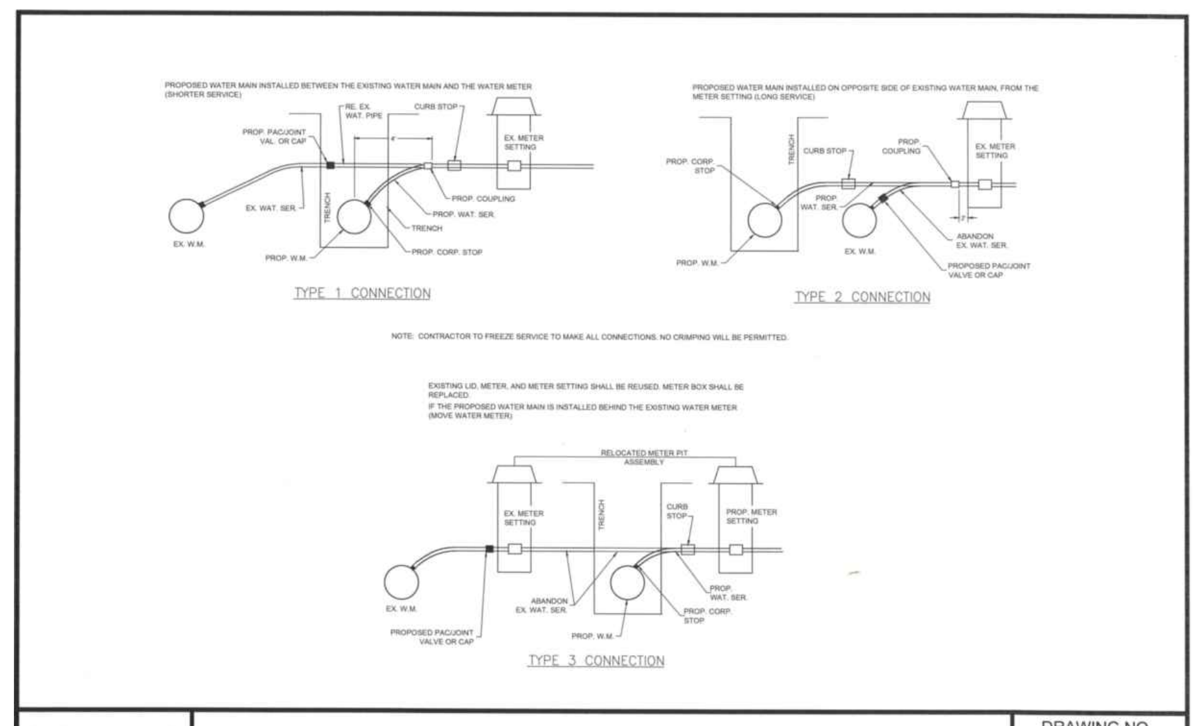

MILFORD OHIO

WATER SERVICE CONNECTION DETAIL

THE CITY OF MILFORD, OHIO

DRAWING NO. W-8

NO SCALE

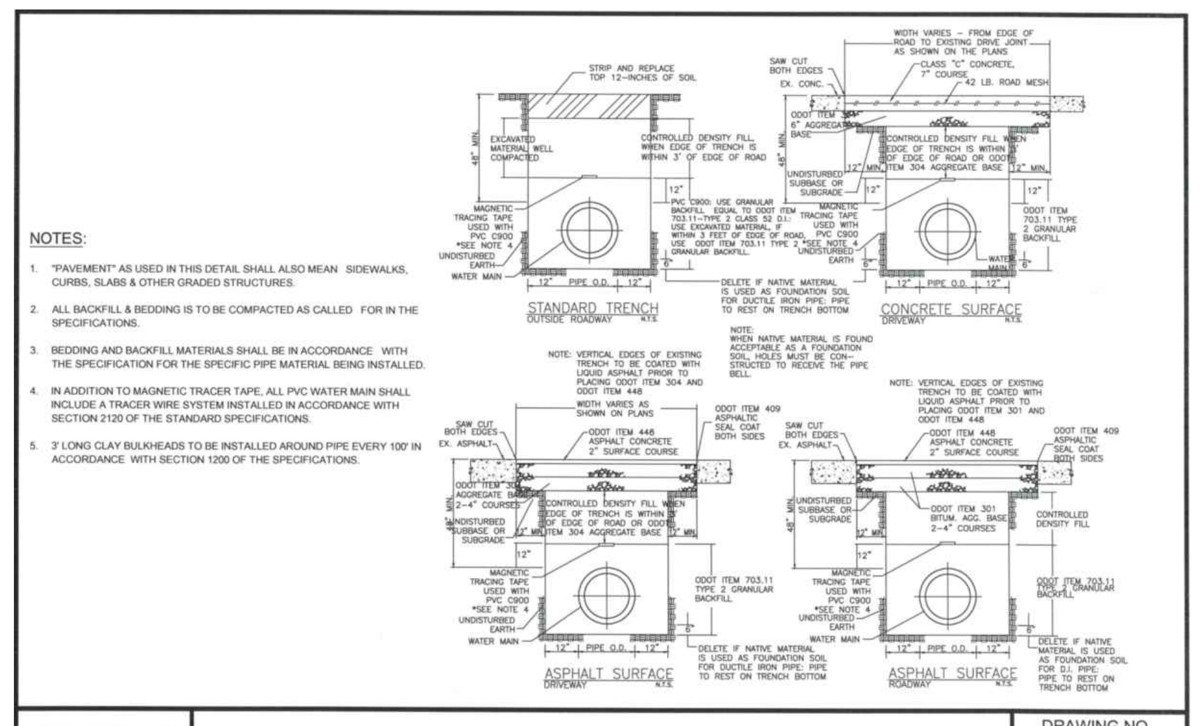

MILFORD OHIO

WATER MAIN TRENCH SECTION

THE CITY OF MILFORD, OHIO

DRAWING NO. W-15

NO SCALE

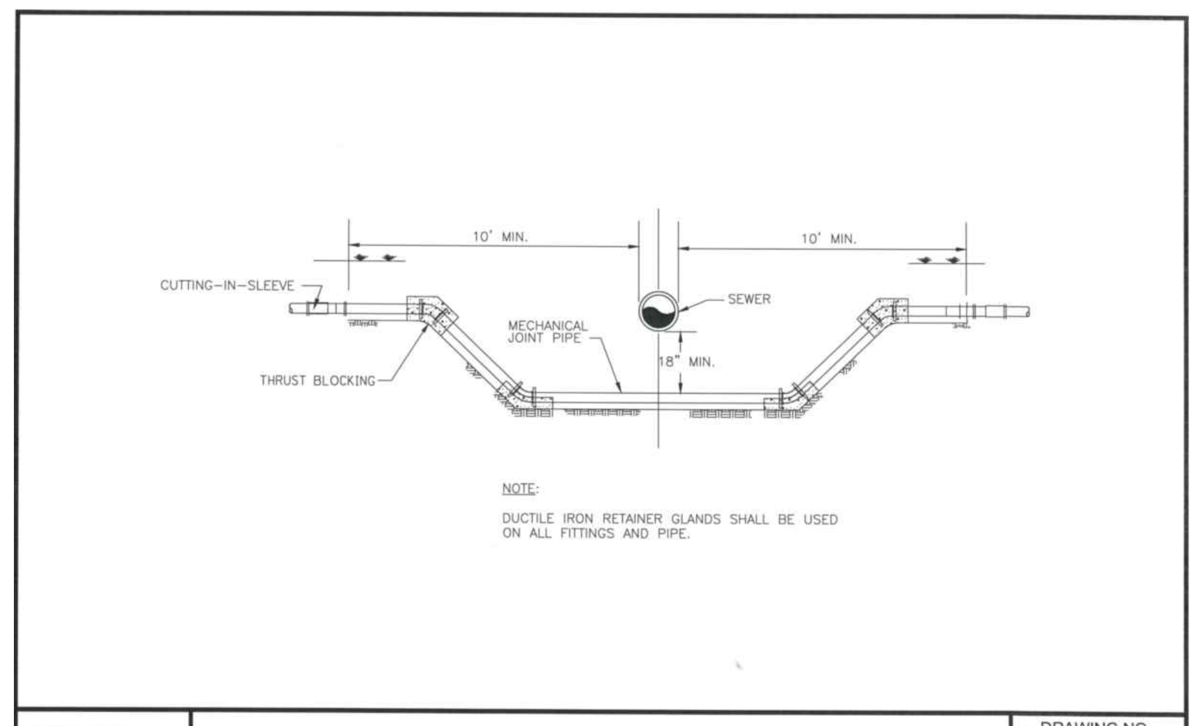

MILFORD OHIO

WATER MAIN LOWERING DETAIL

THE CITY OF MILFORD, OHIO

DRAWING NO. W-16

NO SCALE

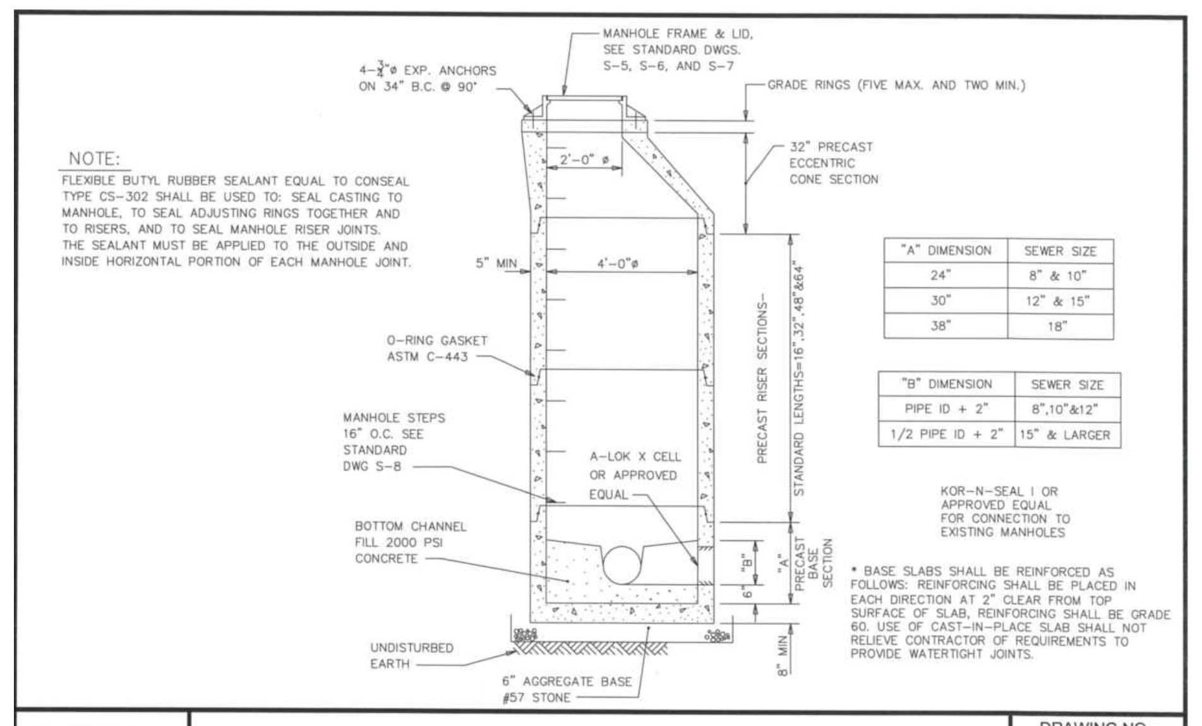

MILFORD OHIO

STANDARD MANHOLE FOR SEWERS 8" TO 18"

THE CITY OF MILFORD, OHIO

DRAWING NO. S-1

NO SCALE

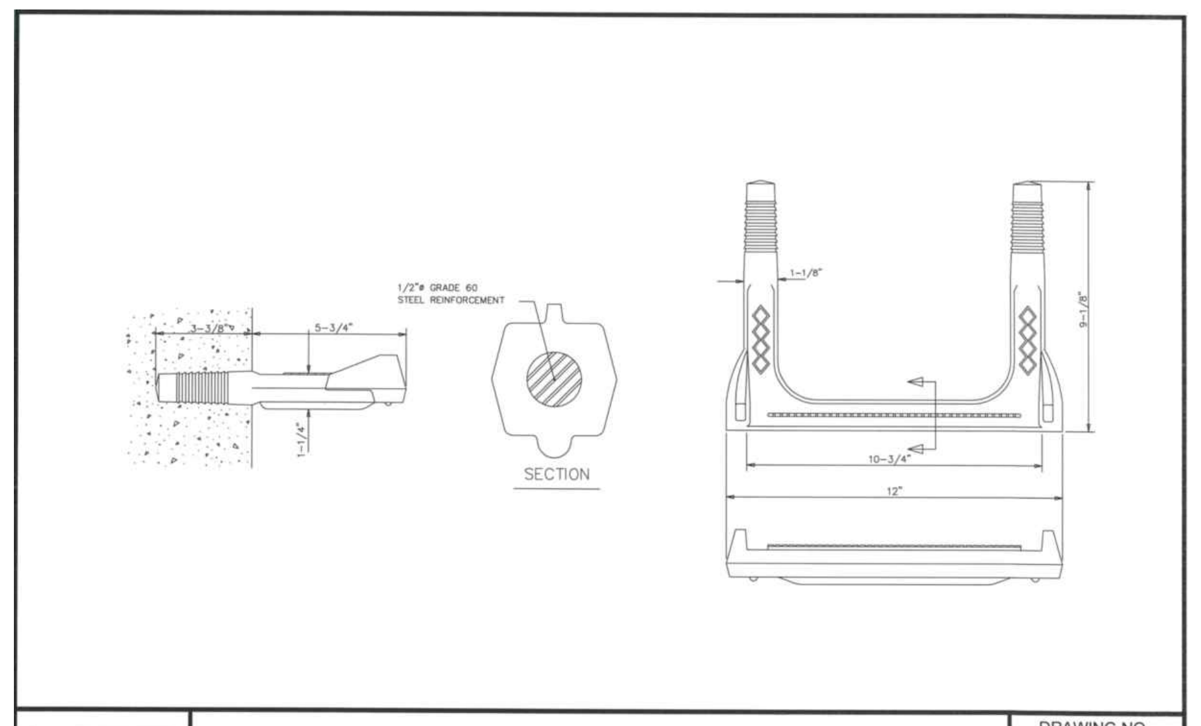

MILFORD OHIO

MANHOLE STEP - COPOLYMER

THE CITY OF MILFORD, OHIO

DRAWING NO. S-8

NO SCALE

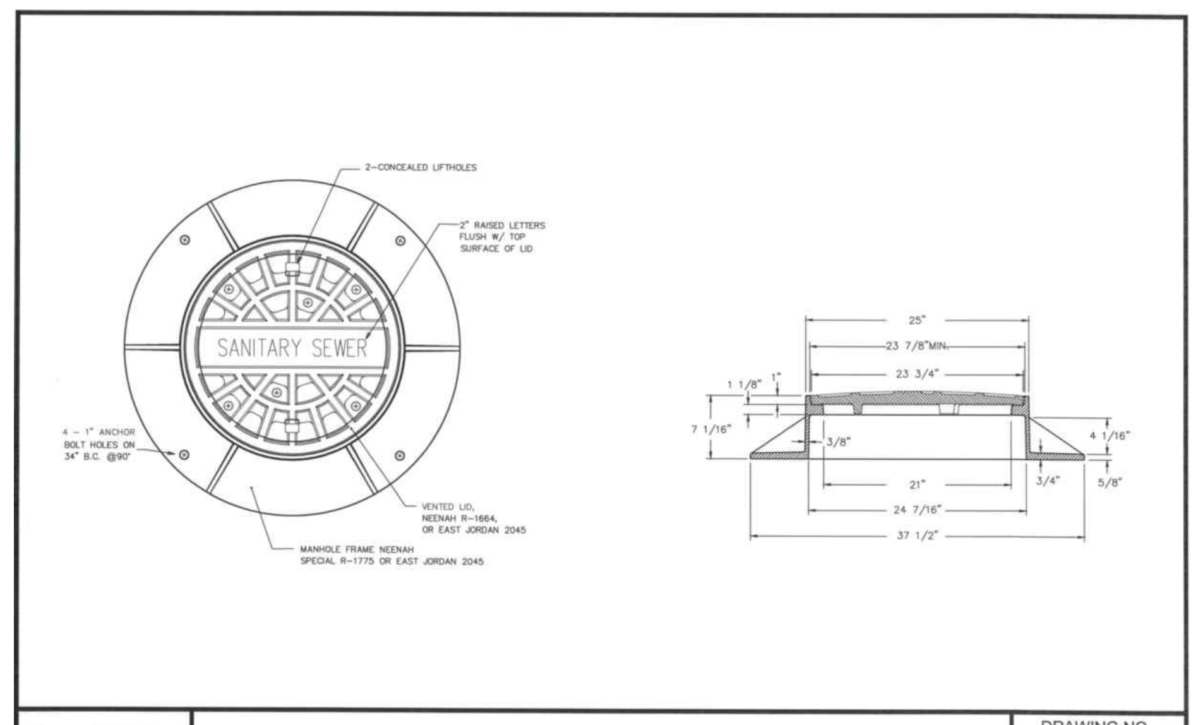

MILFORD OHIO

MANHOLE FRAME WITH VENTED LID

THE CITY OF MILFORD, OHIO

DRAWING NO. S-5

NO SCALE

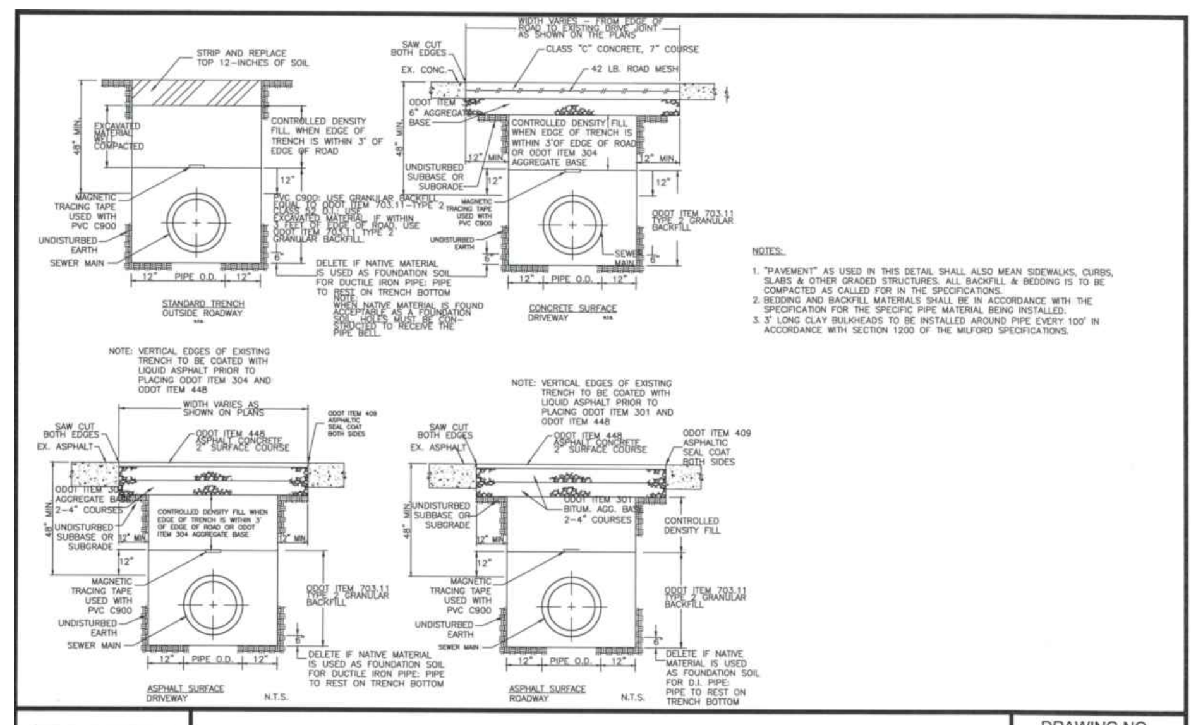

MILFORD OHIO

SANITARY SEWER TRENCH SECTIONS

THE CITY OF MILFORD, OHIO

DRAWING NO. S-11

NO SCALE

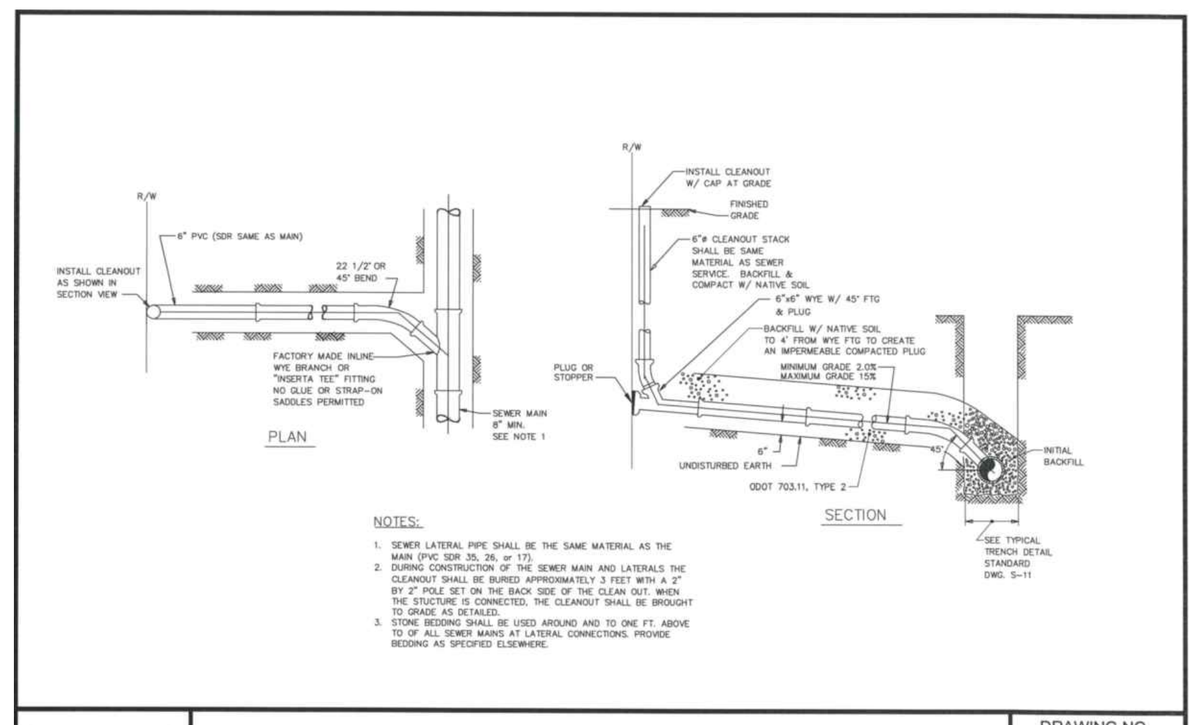

MILFORD OHIO

SEWER LATERAL INSTALLATION

THE CITY OF MILFORD, OHIO

DRAWING NO. S-14

NO SCALE

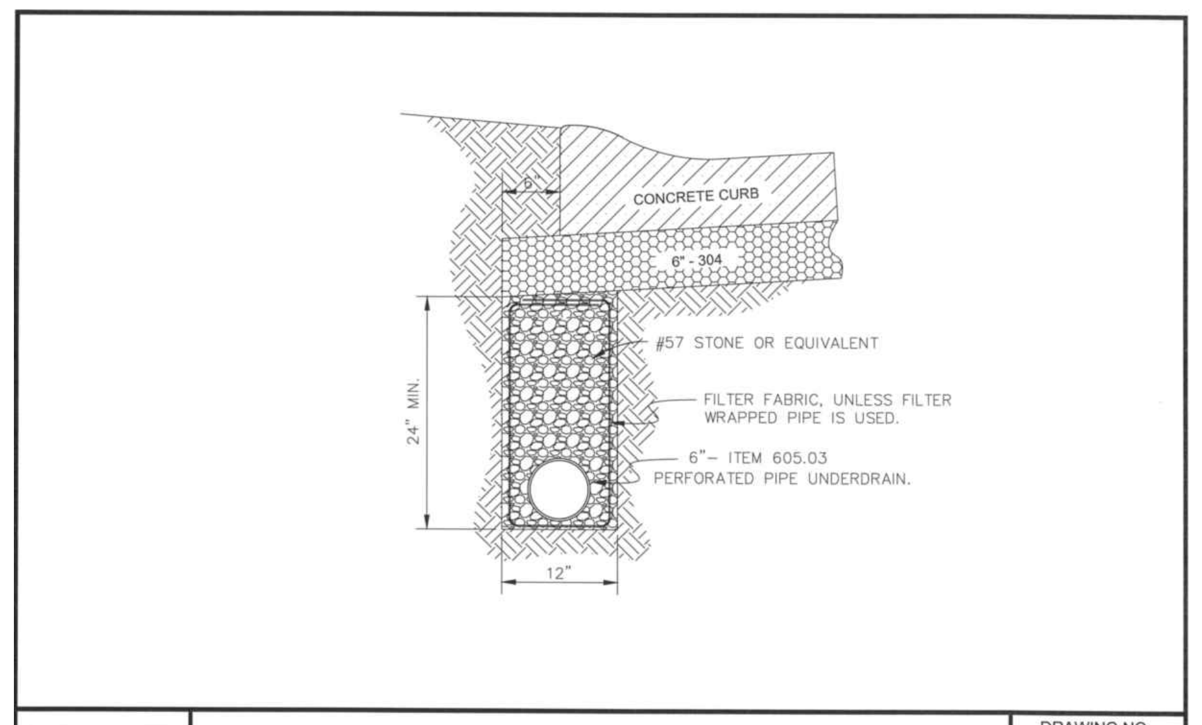

MILFORD OHIO

UNDERDRAIN DETAIL

THE CITY OF MILFORD, OHIO

DRAWING NO. T-5

NO SCALE

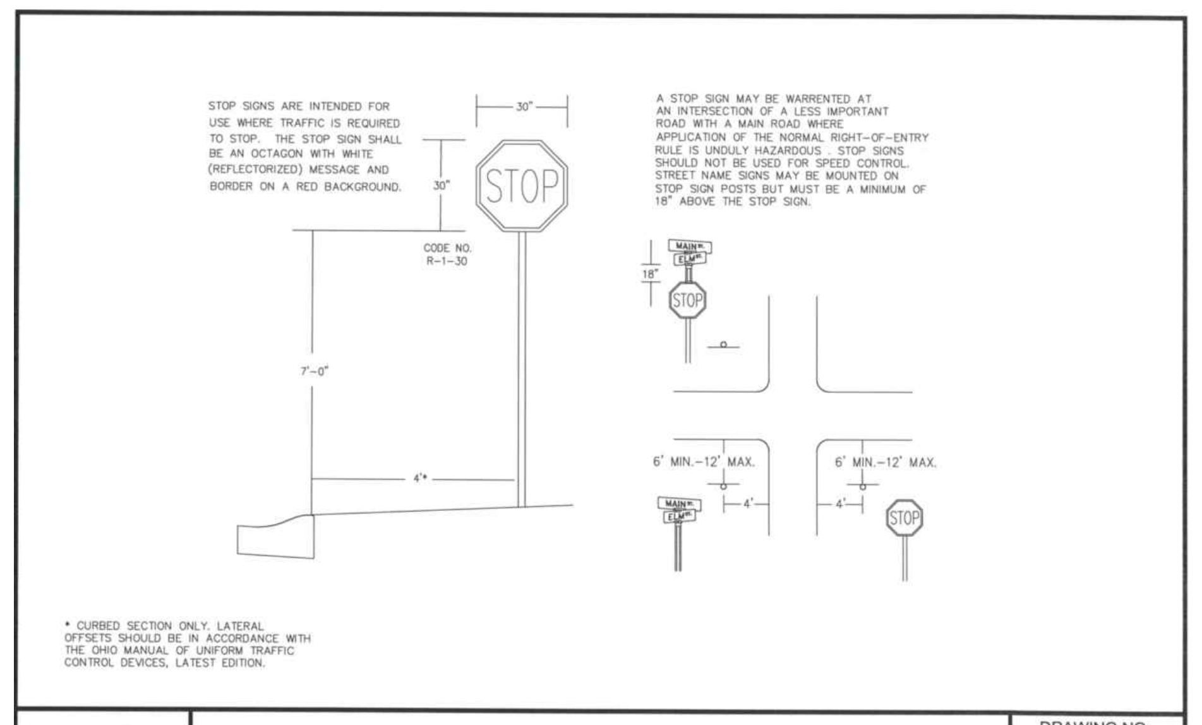

MILFORD OHIO

STOP SIGN

THE CITY OF MILFORD, OHIO

DRAWING NO. T-6

NO SCALE

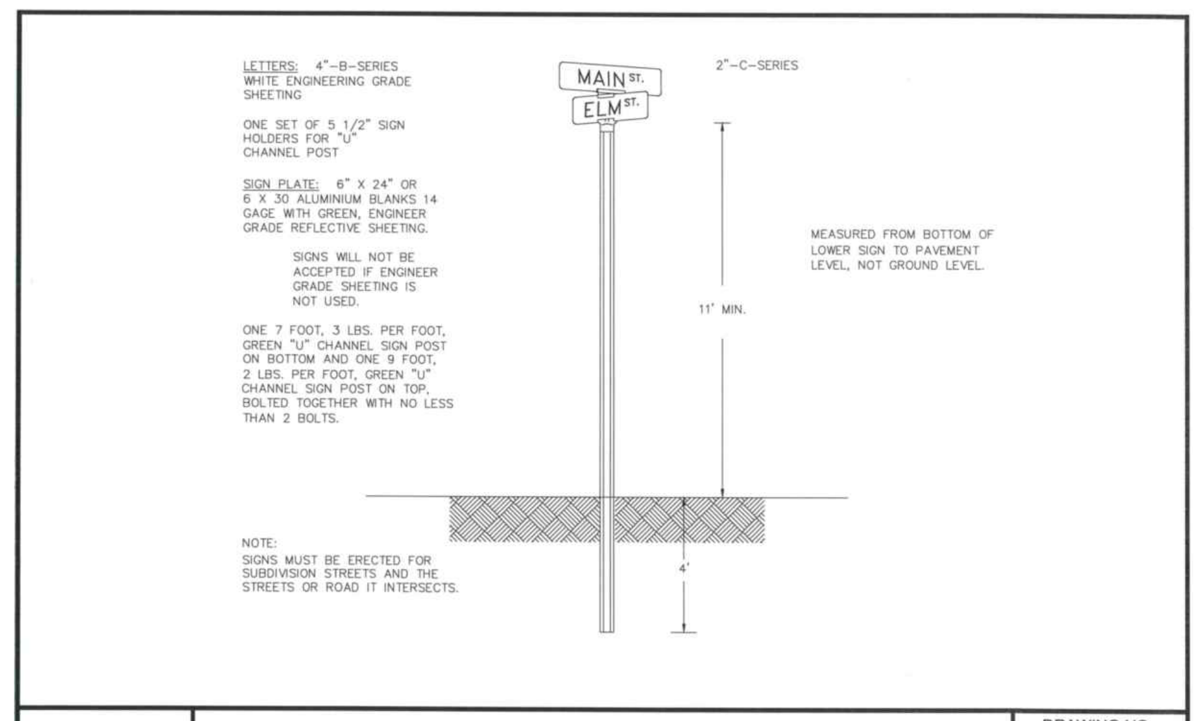

MILFORD OHIO

STREET NAME SIGN SPECIFICATIONS

THE CITY OF MILFORD, OHIO

DRAWING NO. T-7

NO SCALE

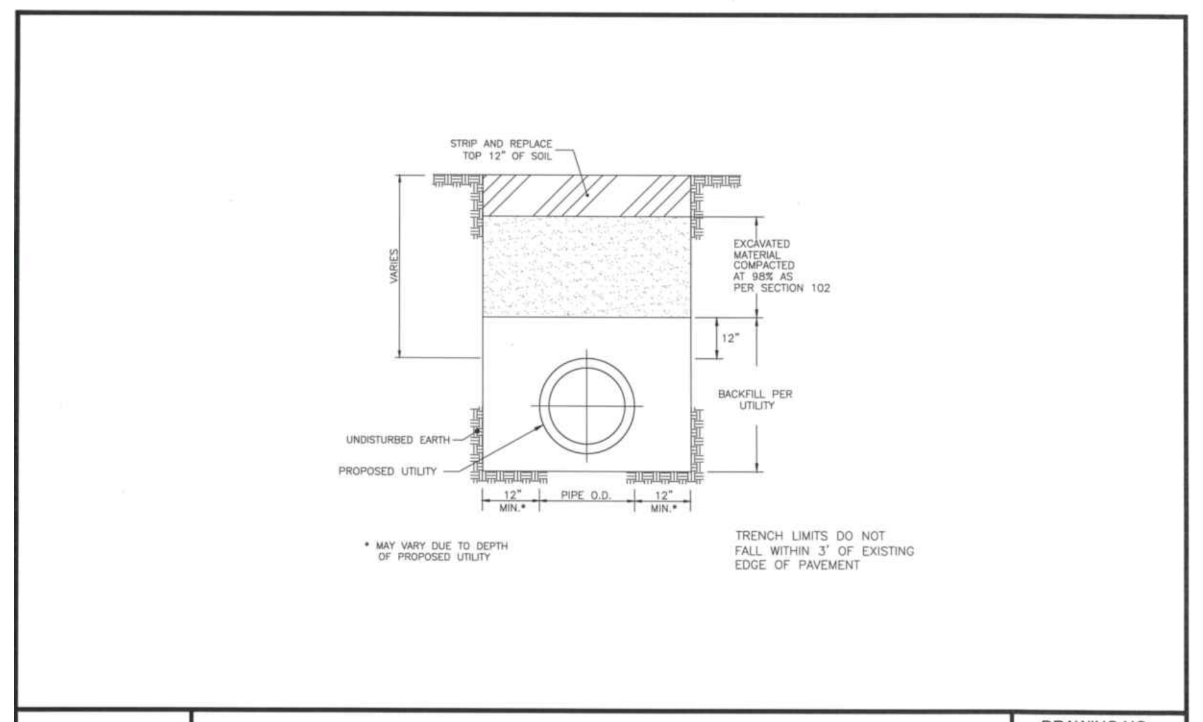

MILFORD OHIO

STANDARD TRENCH

THE CITY OF MILFORD, OHIO

DRAWING NO. T-10

NO SCALE

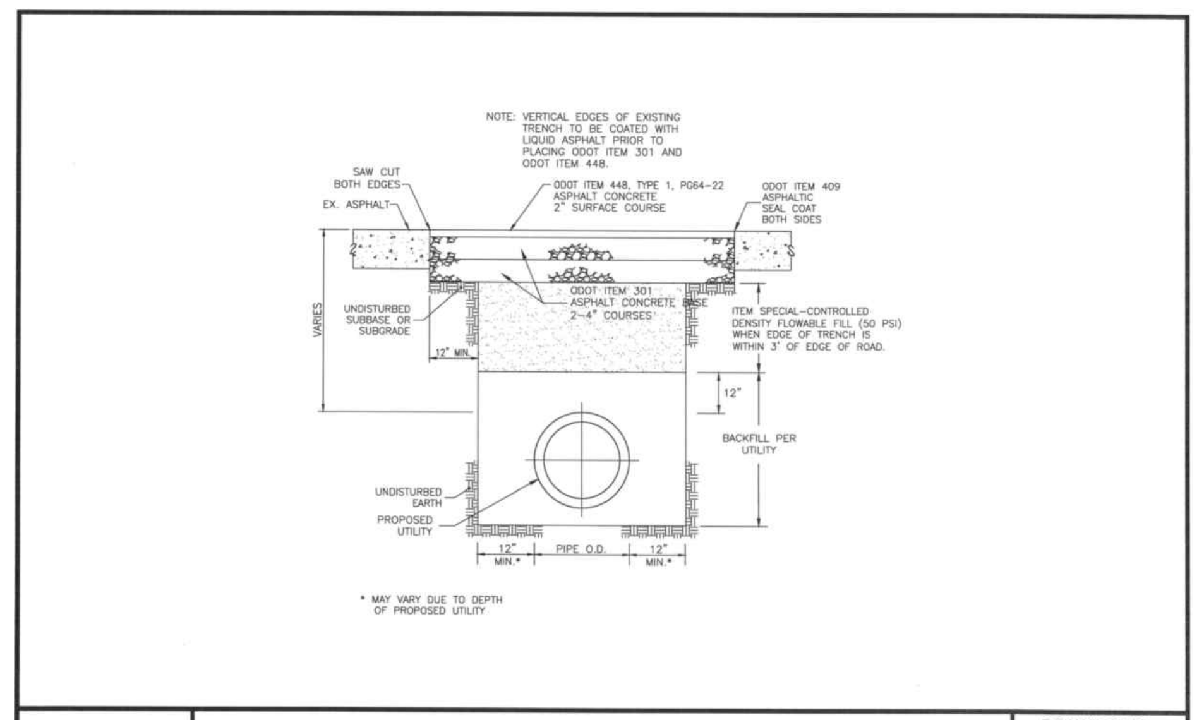

MILFORD OHIO

STANDARD TRENCH WITHIN EXISTING ROADWAY PAVEMENT

THE CITY OF MILFORD, OHIO

DRAWING NO. T-12

NO SCALE

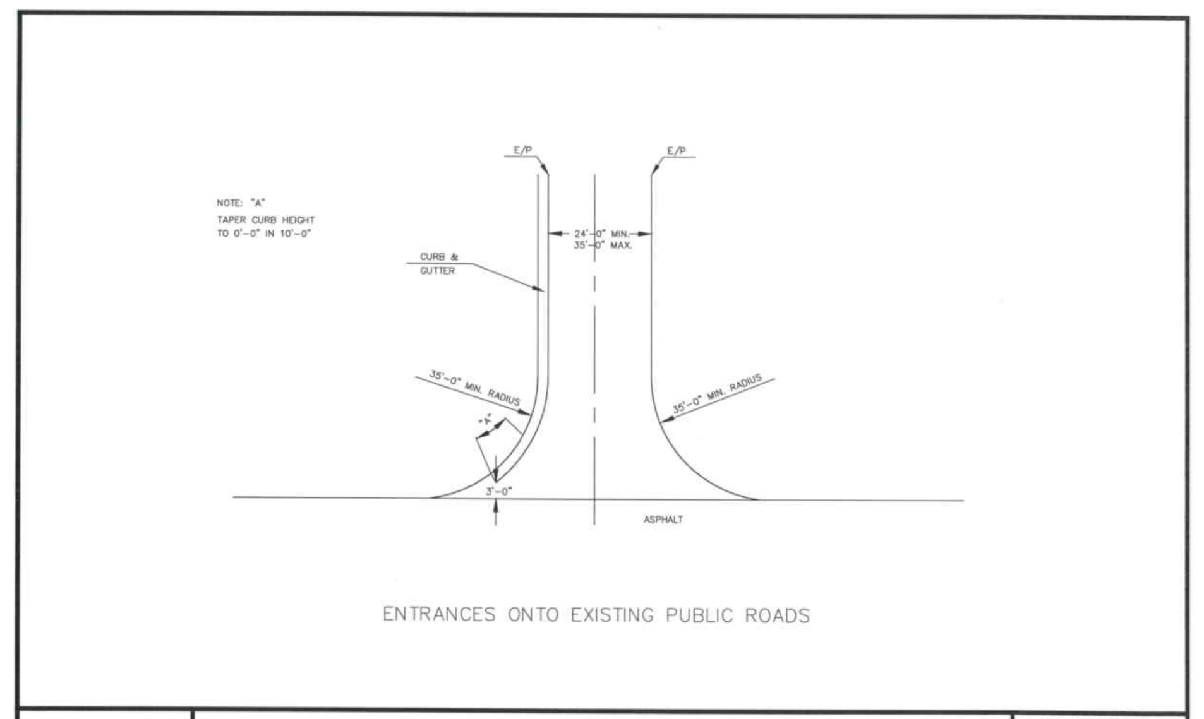

MILFORD OHIO

COMMERCIAL PROPERTY DRIVEWAY DETAIL

THE CITY OF MILFORD, OHIO

DRAWING NO. T-15

NO SCALE

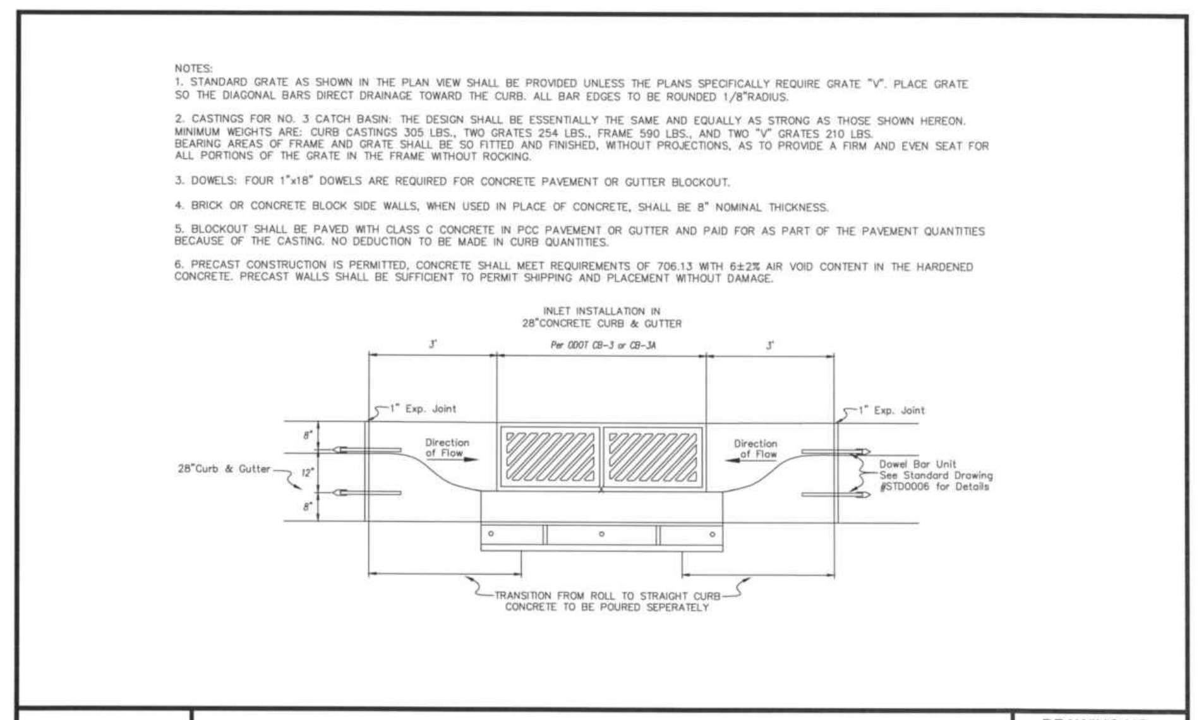

MILFORD OHIO

CATCH BASIN NO. 3 AND 3A MODIFIED

THE CITY OF MILFORD, OHIO

DRAWING NO. T-19.1

NO SCALE

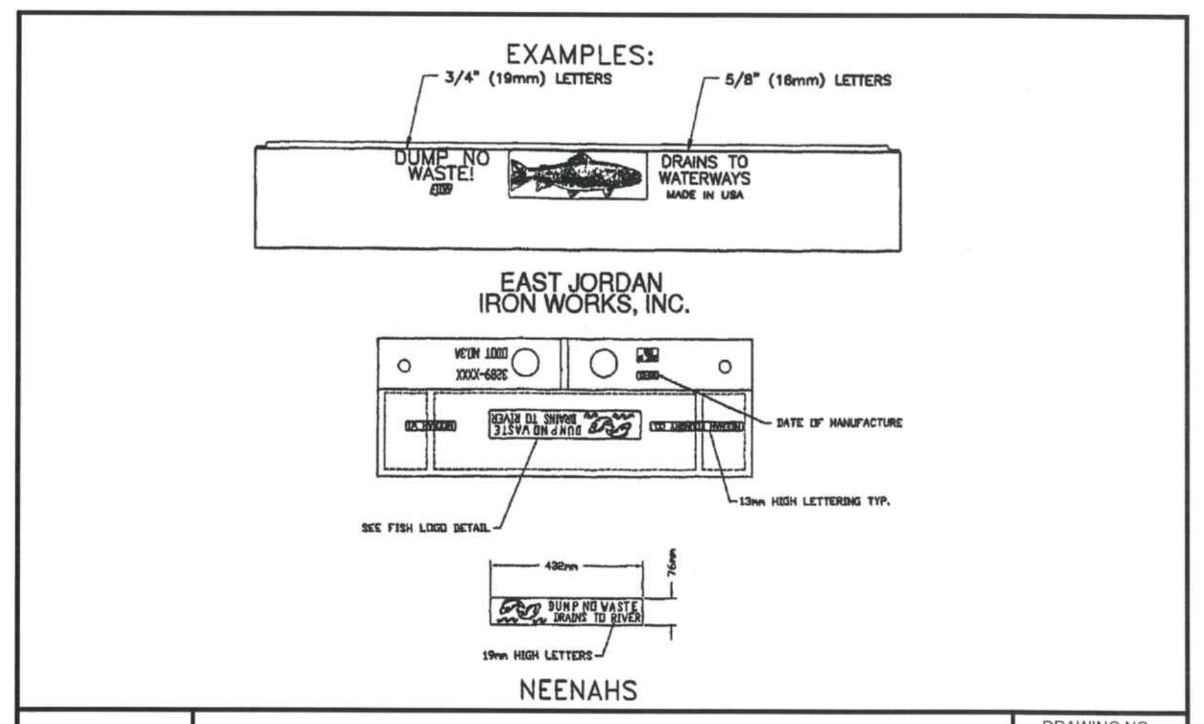

MILFORD OHIO

CURB INLET LOGOS

THE CITY OF MILFORD, OHIO

DRAWING NO. T-20

NO SCALE

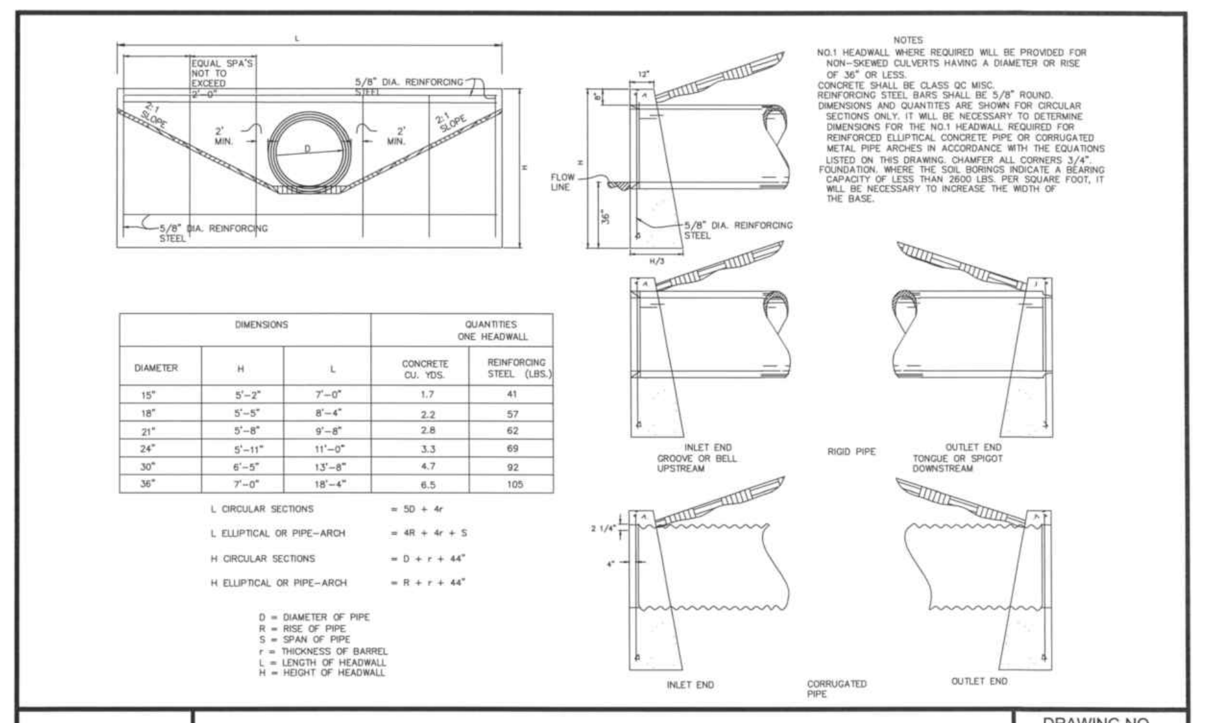

MILFORD OHIO

HEADWALLS HW-1

THE CITY OF MILFORD, OHIO

DRAWING NO. T-21

NO SCALE

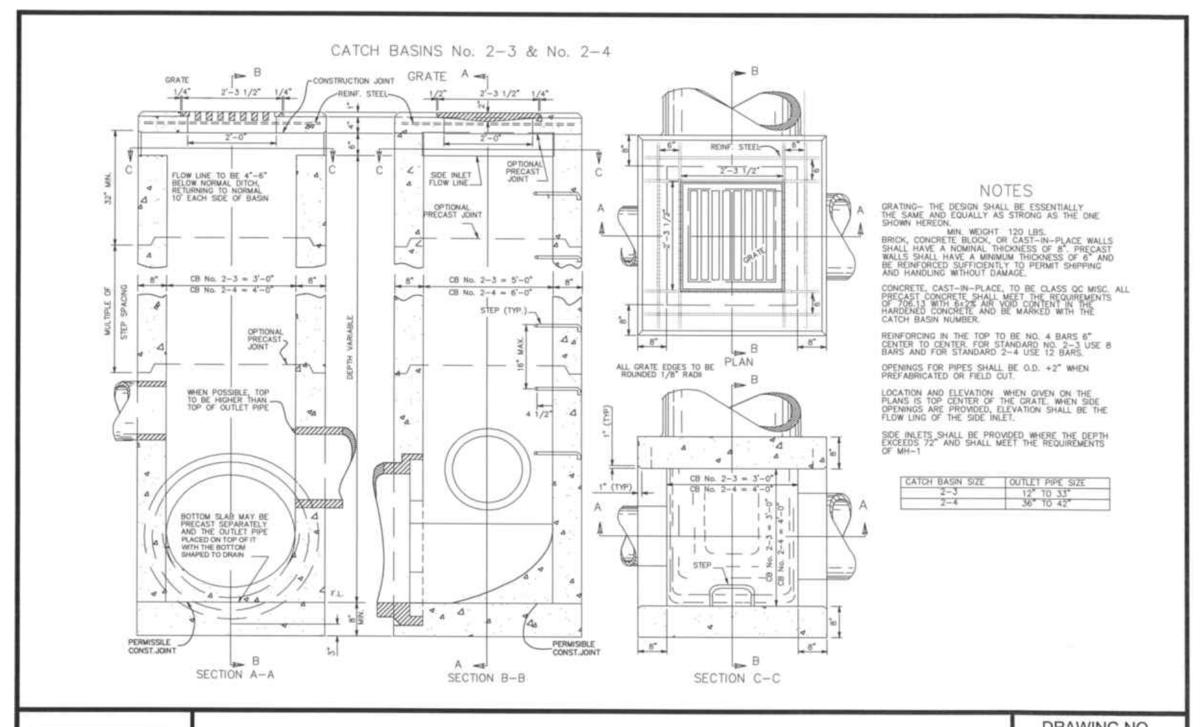

MILFORD OHIO

INLETS 2-3 AND 2-4

THE CITY OF MILFORD, OHIO

DRAWING NO. T-25

NO SCALE

This drawing and the design concepts represented, as instruments of service, are the sole property of Abercrombie & Associates Inc., and may not be used, reproduced, or copied for any purpose without prior written authorization of Abercrombie & Associates, Inc.

OHIO Utilities Protection SERVICE
Call Before You Dig

1-800-362-2764

811
Know what's below. Call before you dig.

QUEENS RIDGE @ MILFORD

Date 3-30-22
Drawn By J.C.
Checked By C.A.
Scale NONE

REVISIONS
5-4-22

DWG: DSGN\GR-DSGN

Sheet Title **MILFORD DETAILS & SPECIFICAITONS**

Project Title
QUEENS RIDGE @ MILFORD
CITY OF MILFORD
CLERMONT COUNTY, OHIO

Abercrombie
& Associates, Inc.
Civil Engineering + Surveying
8111 Cheviot Road, Suite 200
Cincinnati, Ohio 45247
513-385-5757
www.abercrombie-associates.com

Job No. 21-0163

3 / 8

CURVE TABLE					
CURVE	DELTA	RADIUS	LENGTH	CHORD	BEARING
C1	88°24'54"	20.00'	30.86'	27.89'	N 59°47'33" E
C2	18°31'57"	115.00'	37.20'	37.04'	N 24°51'04" E
C3	6°43'45"	85.00'	9.98'	9.98'	N 30°45'11" E

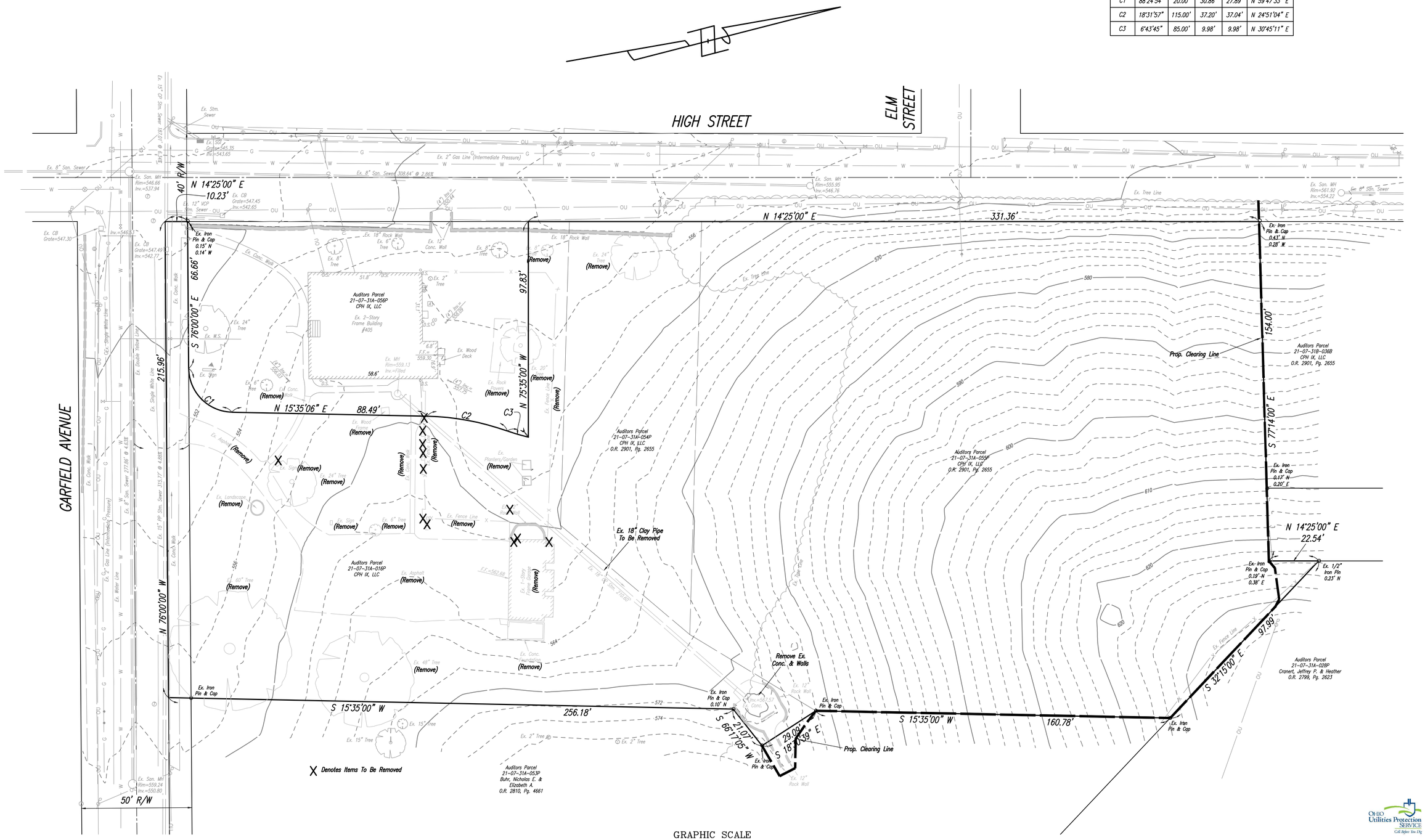

Ohio Utilities Protection Service
Call Before You Dig
1-800-362-2764
811 Know what's below. Call before you dig.

QUEENS RIDGE @ MILFORD

Date 3-30-22
Drawn By J.C.
Checked By C.A.
Scale 1" = 20'

REVISIONS
5-4-22

DWG: DSGN\CP-DSGN

Sheet Title: EX. CONDITIONS & DEMO PLAN

Project Title: QUEENS RIDGE @ MILFORD
CITY OF MILFORD
CLERMONT COUNTY, OHIO

Abercrombie & Associates, Inc.
Civil Engineering + Surveying
8111 Cheviot Road, Suite 200
Cincinnati, Ohio 45247
513-385-5757
www.abercrombie-associates.com

Job No. 21-0163

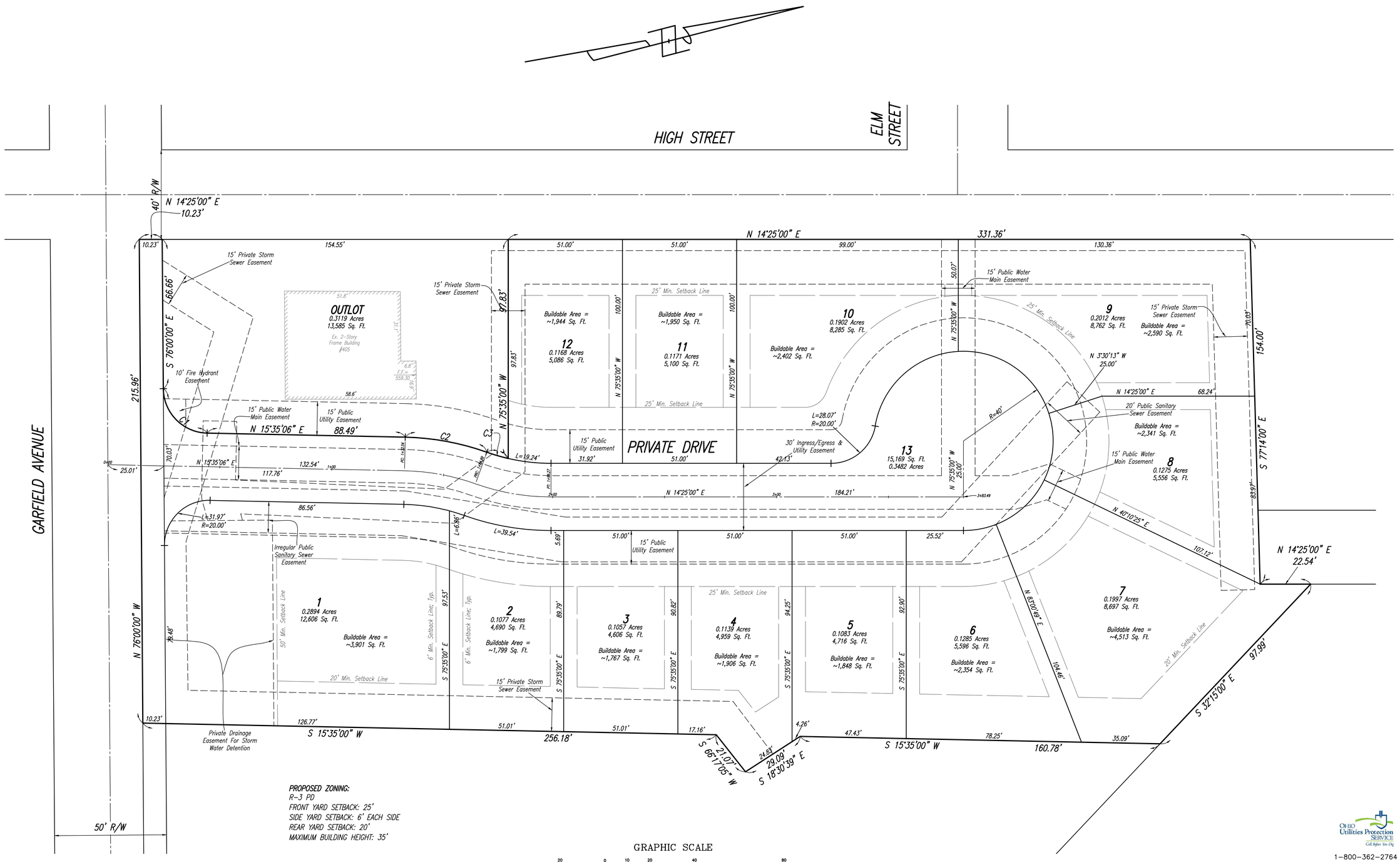

PROPOSED ZONING:
R-3 PD
FRONT YARD SETBACK: 25'
SIDE YARD SETBACK: 6' EACH SIDE
REAR YARD SETBACK: 20'
MAXIMUM BUILDING HEIGHT: 35'

GRAPHIC SCALE

20 0 10 20 40 80

(IN FEET)
1 inch = 20 ft.

OHIO Utilities Protection SERVICE
Call Before You Dig
1-800-362-2764
811 Know what's below. Call before you dig.

QUEENS RIDGE @ MILFORD

Date 3-30-22
Drawn By J.C.
Checked By C.A.
Scale 1" = 20'

REVISIONS
5-4-22

DWG: DSGN\GR-DSGN

Sheet Title
DIMENSION PLAN

Project Title
QUEENS RIDGE @ MILFORD
CITY OF MILFORD
CLERMONT COUNTY, OHIO

Abercrombie & Associates, Inc.
Civil Engineering + Surveying
8111 Cheviot Road, Suite 200
Cincinnati, Ohio 45247
513-385-5757
www.abercrombie-associates.com

Job No. 21-0163

HIGH STREET

ELM STREET

GARFIELD AVENUE

40' R/W

50' R/W

OUTLOT

PRIVATE DRIVE

Ex. 2" Gas Line (Intermediate Pressure)

Prop. 4' Sidewalk

Ex. Tree Line

15' Private Storm Sewer Easement

Ex. Conc. Sidewalk To Remain

Prop. Re-Built Conc. Sidewalk Through Entrance

10' Fire Hydrant Easement

Prop. Temp. Construction Entrance (See Detail)

15' Public Water Main Easement

15' Public Utility Easement

Ex. 2-Story Frame Building #405

26' Min. Setback Line

25' Min. Setback Line

20' Min. Setback Line

10' Min. Setback Line

6' Min. Setback Line, Typ.

Irregular Public Sanitary Sewer Easement

30' Ingress/Egress & Utility Easement

Prop. Retaining Wall (Approx. Height & Location)

Prop. Clearing Line

20' Public Sanitary Sewer Easement

Private Drainage Easement For Storm Water Detention

Prop. Silt Fence (See Detail)

Prop. Inlet Protection During Construction; "Flexstorm" Or Approved Equal

GRAPHIC SCALE

20 0 10 20 40 80

(IN FEET)
1 inch = 20 ft.

OHIO Utilities Protection SERVICE
Call Before You Dig
1-800-362-2764

811 Know what's below. Call before you dig.

QUEENS RIDGE @ MILFORD

Date 3-30-22
Drawn By J.C.
Checked By C.A.
Scale 1" = 20'

REVISIONS
5-4-22

DWG: DSGN\GR-DSGN

Sheet Title: GRADING PLAN

Project Title: QUEENS RIDGE @ MILFORD
CITY OF MILFORD
CLERMONT COUNTY, OHIO

Abercrombie & Associates, Inc.
Civil Engineering + Surveying
8111 Cheryl Road, Suite 200
Cincinnati, Ohio 45247
513-385-5757
www.abercrombie-associates.com

Job No. 21-0163

DETENTION STRUCTURE #300 DETAIL
MODIFIED ODOT CB 2-6

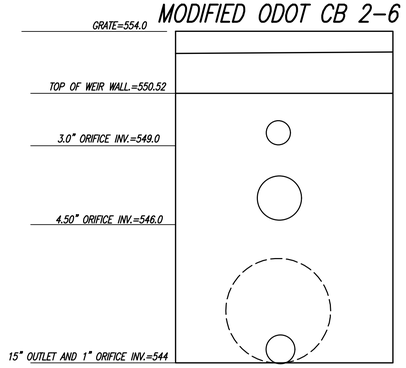

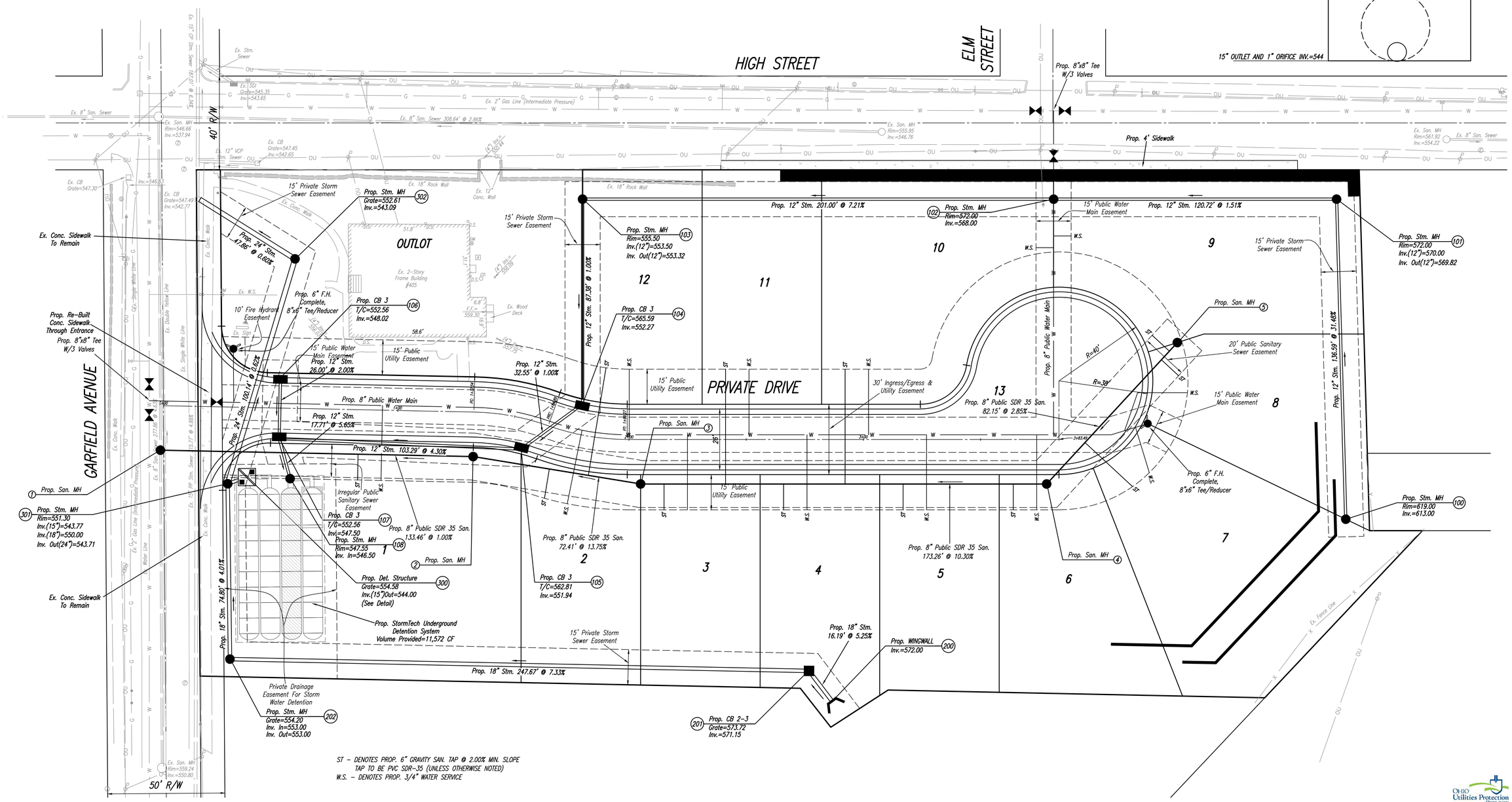

ST – DENOTES PROP. 6" GRAVITY SAN. TAP @ 2.00% MIN. SLOPE TAP TO BE PVC SDR-35 (UNLESS OTHERWISE NOTED)
W.S. – DENOTES PROP. 3/4" WATER SERVICE

GRAPHIC SCALE

20 0 10 20 40 80

(IN FEET)
1 inch = 20 ft.

OHIO Utilities Protection SERVICE
Call Before You Dig
1-800-362-2764
811 Know what's below. Call before you dig.

QUEENS RIDGE @ MILFORD

Date	3-30-22
Drawn By	J.C.
Checked By	C.A.
Scale	1" = 20'
REVISIONS	5-4-22
DWG.	DSGN\GR-DSGN

Sheet Title: UTILITY PLAN

Project Title: QUEENS RIDGE @ MILFORD
CITY OF MILFORD
CLERMONT COUNTY, OHIO

Abercrombie & Associates, Inc.
Civil Engineering + Surveying
8111 Cheryl Road, Suite 200
Cincinnati, Ohio 45247
513-385-5757
www.abercrombie-associates.com

Job No. 21-0163

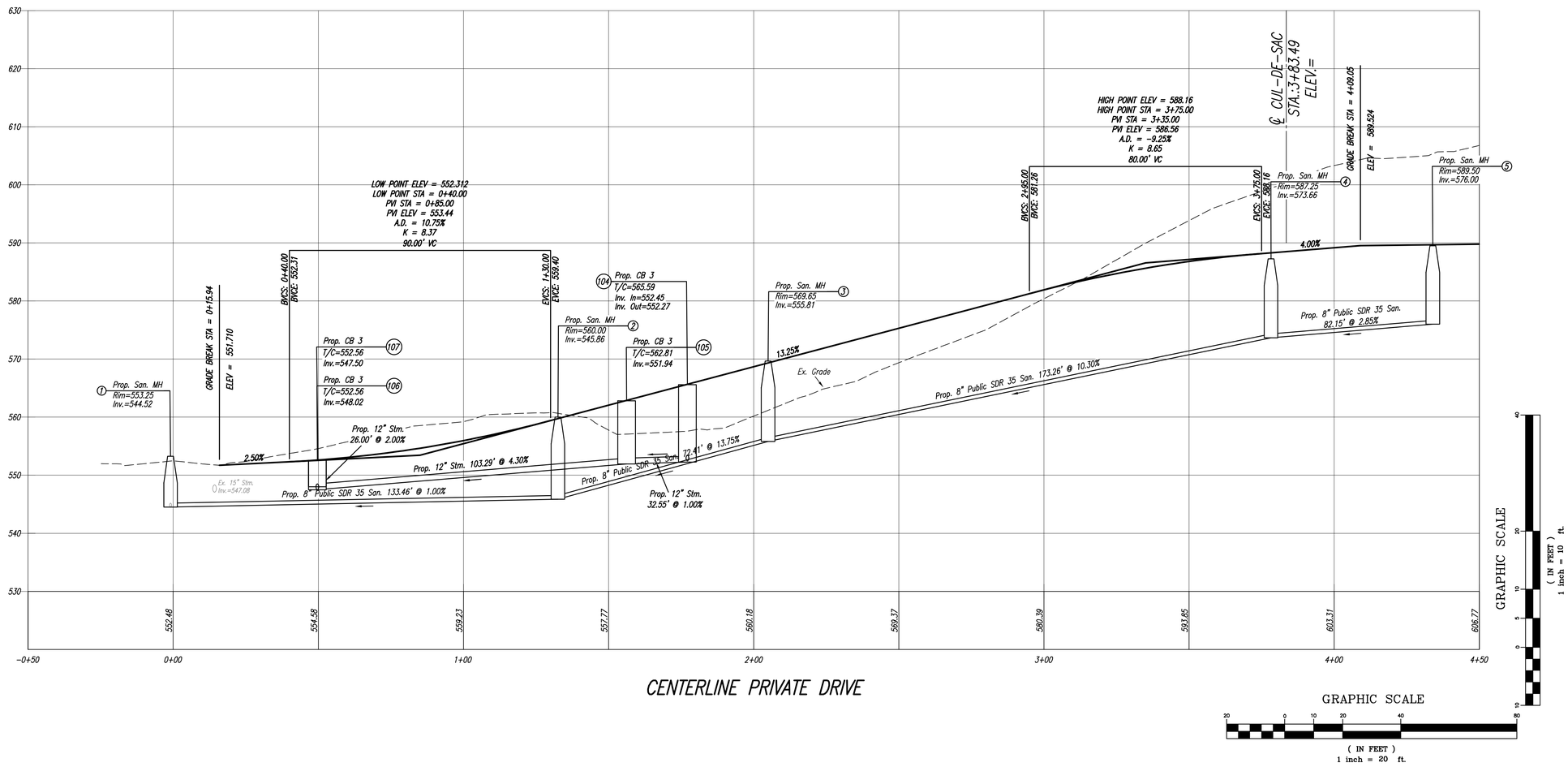

Ohio Utilities Protection Service
Call Before You Dig
1-800-362-2764
811
Know what's below. Call before you dig.

QUEENS RIDGE @ MILFORD

Date 3-30-22
Drawn By J.C.
Checked By C.A.
Scale AS SHOWN

REVISIONS
5-4-22
DWG: DSGN\GP-DSGN

Sheet Title
PROFILE SHEET

Project Title
QUEENS RIDGE @ MILFORD
CITY OF MILFORD
CLERMONT COUNTY, OHIO

Abercrombie & Associates, Inc.
Civil Engineering + Surveying
8111 Cheviot Road, Suite 200
Cincinnati, Ohio 45247
513-385-5757
www.abercrombie-associates.com

Job No.
21-0163